# Dice Sauna

## Exterior construction guide

Dice Sauna (POCKET and SOLO)
Compatible with both glass wall and wood wall construction options.

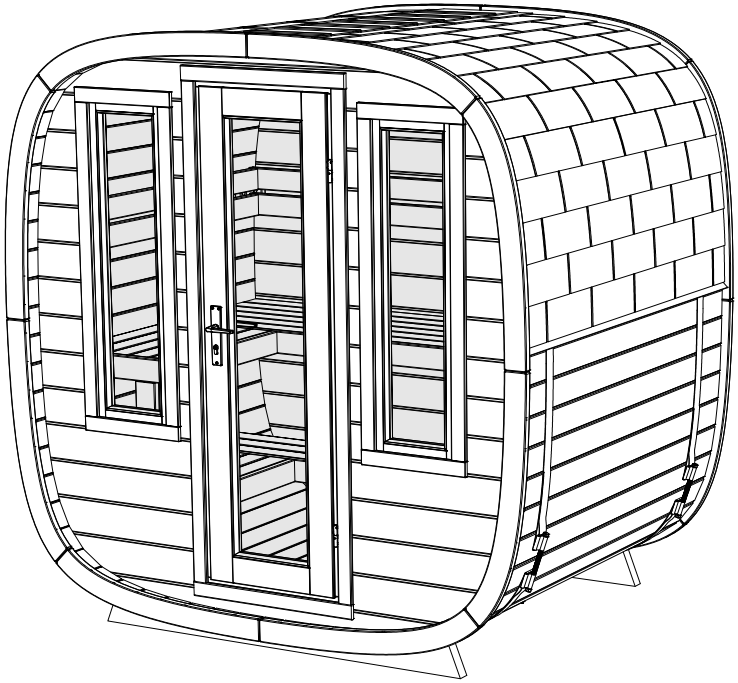

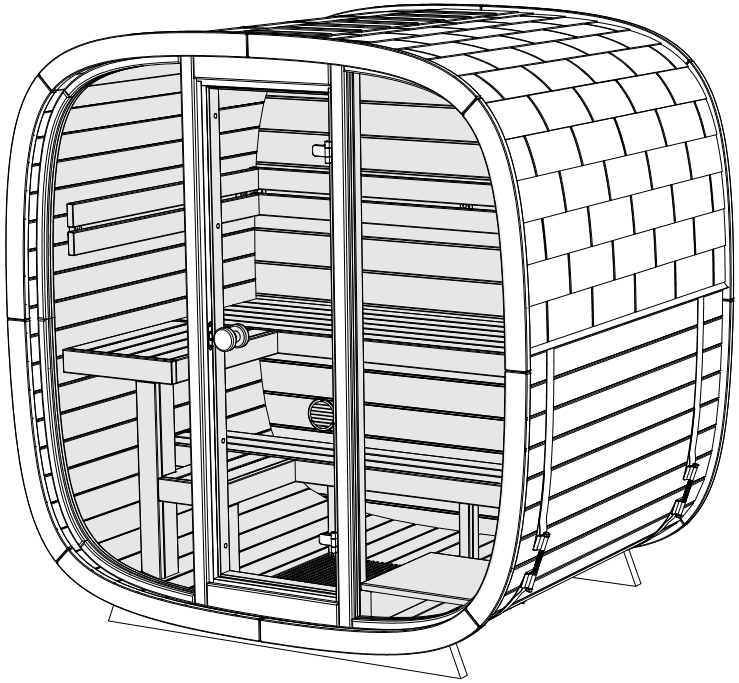

*Check the parts for completeness before assembly!*

# USER MANUAL OF THE SAUNA

1. It is recommended to install the sauna above ground level to prevent the legs of the sauna from coming into direct contact with the ground. Install a water-resistant material, such as bitumen strips, between the legs of the sauna and the base.
2. Make sure that the surface on which you install the sauna is levelled and stable both before and after installing the sauna. Otherwise, the doors of the sauna may not open and close properly.
3. If the top part of the chimney has not been installed upon delivery of the sauna, it should be placed into the chimney pipe from the roof of the sauna.
4. During the first heating of the sauna, it must be constantly supervised and the doors should be kept open, as the stove emits a specific smell when first heated. Read more from the user manual of the sauna stove.
5. The maximum permitted temperature of the steam room is **+90 °C**. If heated to a higher temperature, the sauna may be overheated.
6. After each use of the sauna, it is recommended to keep the stove warm, the doors open, and the footrests up for a while to allow the sauna to dry from the inside. If necessary, the water on the floor should be directed to the drain with a floor scraper to avoid damage caused by excess humidity.
7. **When the weather is humid and if the wood has expanded, the metal hoops around the sauna should be loosened to avoid breaking the clamps and jamming the doors.** The hoops can be adjusted from the nut of clamp M12 located on the side of the sauna. To alleviate excess tension on the clamp and the hoop itself, loosen nut M12 (wrench no. 19) until the hoop can be shifted left and right. Then, re-tighten the nut until the hoop is under slight pressure and pressed fully against the wood so that it cannot be pulled away from the walls of the sauna. **When the weather is less humid and the wood has dried, the metal hoops around the sauna should be tightened from nut M12.** Tighten the nut so the hoop is under slight pressure. The hoop must be pressed fully against the wood so that it cannot be pulled away from the walls of the sauna. Saunasell OÜ is not liable for damage caused to the sauna due to a broken hoop clamp.
8. If the door is shifted out of place when the hoops are tightened, lift the exterior door off the hinges and regulate the hinges. If this is not a sufficient solution, remove the trims of the door and unscrew the screws of the doorframe beneath them. This will relieve the pressure on the door. If necessary, the opening of the door may be made wider, after which the screws should be re-tightened and the trims and door reinstalled.
9. The interior door should be regulated from the stopper and, if necessary, the hinges. If this is not a sufficient solution, remove the trims of the door and unscrew the screws of the doorframe beneath them. This will relieve the pressure on the door.
10. Locking the sauna door from the inside is prohibited.
11. In order to avoid damage caused by the weight of snow, any snow should be removed from the roof of the sauna. Keep in mind that the roof covering should not be damaged during snow removal.
12. If your sauna has lighting, install a 3G 2,5 $mm^2$ outdoor power cable and connect it in juniper box provided with the sauna (L1 – brown , N – blue , GR – green-yellow). The power cable of the sauna must be connected to a residual-current circuit breaker! Consult an electrician if necessary.

**Maintenance of the sauna**

1. **The interior surfaces of the sauna, the window frames of the steam and washing room, and the frames of interior doors must be treated with a special substance before initial use to protect them from humidity and dirt and extend the useful life of the sauna.** Later, this should be done once or twice a year. TEKNOS Satu Saunasuoja or Tikkurila Supi Saunasuoja may be used for this.
2. **Before initial use of the sauna, the benches and footrests must be treated with a protective oil to extend their useful life.** Later, this should be done once or twice a year. TEKNOS Satu Laudesuoja or Tikkurila Supi Laudesuoja may be used for this.
3. **Before initial use of the sauna and once a year after that, the door, doorframe, threshold, and window frame of the anteroom as well as the floors of the washing room and anteroom should be treated with the lacquer Teknos Helo Aqua 40.**
4. **The exterior surfaces of the sauna are given the first protective coating during production. The second coating should be applied approximately two months after purchasing the sauna to extend its useful life and maintain its appearance.** Use Remmers Aidol HK-Lasur for this. The substance is available for purchase at Saunasell OÜ or from the website https://trendwood.ee/tooted/viimistlus/remmers/
5. Saunasell OÜ is not liable for damage caused to the sauna due to insufficient maintenance or no maintenance at all.

## WARRANTY

- The products have a 24-month warranty covering material and production defects, taking effect from the delivery of the sauna to the client.
- The warranty is valid if the user has reviewed the user manuals and abides by them.
- The warranty is void if the sauna has not been assembled by Saunasell OÜ.
- Please note! The warranty period differs for products on trailers and products intended for commercial use.
- The warranty does not cover defects characteristic of wood, such as discoloration, changes, issues, or cracks caused by alternating or excess humidity, etc.
- The warranty does not cover normal wear and tear of the product caused by its use and damage caused by incorrect installation or use is not compensated.
- The warranty does not cover damage caused by thunder or other weather phenomena.
- The warranty does not cover damage caused by incorrect installation by the client.
- The warranty expires when attempts are made to independently change or fix the product or if it is not used for its intended purpose.
- The warranty is void if the product is stored in an incorrect position or in the wrong conditions.
- The warranty is valid if the buyer informs the seller of the defect within a reasonable time (7 days).

# DOOR ADJUSTMENT MANUAL

### 1) Vertical adjustment of the door sash

The hinge on the side of the sash has a height adjustment bolt (fig.1), from which is possible to adjust the distance between the hinges. Turning clockwise, the hinges move further apart, and the door sash moves higher. It must be remembered that all hinges should be equally set at the same height, so as not to burden just one hinge.




**Fig.1** Sash hinge height adjustment bolt

### 2) Horizontal adjustment of the door sash

The horizontal adjustment of the door sash can be done through the hinge on the frame (fig.2). Turning the bolt clockwise moves the sash closer to the hinge, turning counter-clockwise, moves the sash away from the hinge. The door sash should be adjusted so that the frame is at an equal distance from the edge of the frame. When turning the bolt, you should manually support the sash in the same direction so as not to bend the hinge.




**Fig.2** Frame horizontal direction adjustment bolt

### 3) Adjusting the depth of the door frame

The distance of the door sash to the door frame can be adjusted both by the hinges (fig.3) and by the lock (fig.4). The distance between the sash and the frame can be adjusted by the hinges by turning the bolt in Fig.3 – clockwise, the sash moves closer to the frame, counter-clockwise further. The distance between the door sash and the frame on the lock side can be adjusted by bending the metal “ears” in figure 4 apart with a screwdriver. If necessary, the “ears” can also be back with a screwdriver.




**Fig.3** Door sash depth adjustment bolt

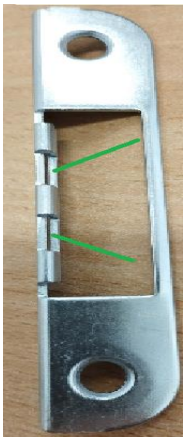

**Fig. 4** Depth adjustment points on the lock side

### 4) Door finishing guide

- Clean the door from dust and dirt
- Remove or cover the lock, handles and hinges
- The product to be finished, must be dry and dust-free
- Finish the door with a suitable primer (NB! Finish both sides of the door)
- Finish the door with a substance suitable for outdoor conditions

**Finishing is important so that the door maintains smooth closing and is durable in outdoor conditions.**

# ADJUSTING THE HINGES

- Remove plastic from hinges (first picture). To remove plastic, lift it from the places indicated by the red lines;
- To regulate hinges you need TORX 30 bit and cordless drill;
- Loosen the bolt shown in figure slightly. (DO NOT OPEN COMPLETELY);
- If both hinge bolts are slightly loosened, it is possible to move the glass in the directions shown in the figure;
- If the glass is set to the required distance, the bolts must be tightened again.




# ADJUSTMENT OF THE ROLLER-LOCK

- PH2 screwdriver required;
- The roller lock can be adjusted by turning the screw indicated by the red line;
- Turning clockwise moves the roller inward and turning counter-clockwise moves the roller outward;
- The roller should be adjusted so that the glass moves freely behind the roller without applying force.



DRW no: DSP Sb1.6 Fgw

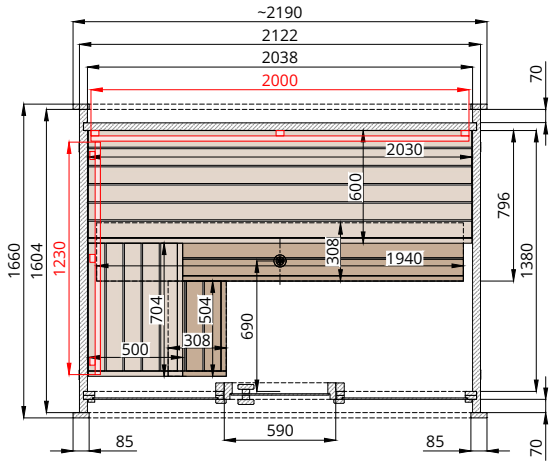


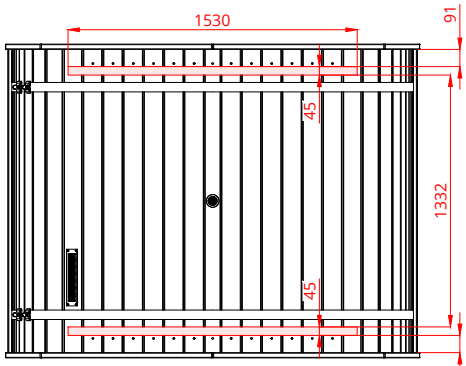


Bottom view

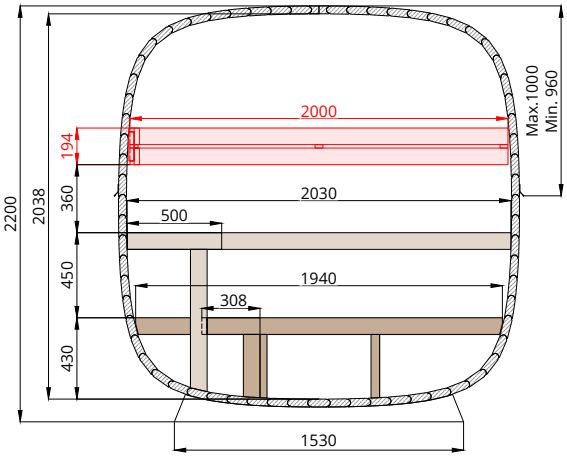


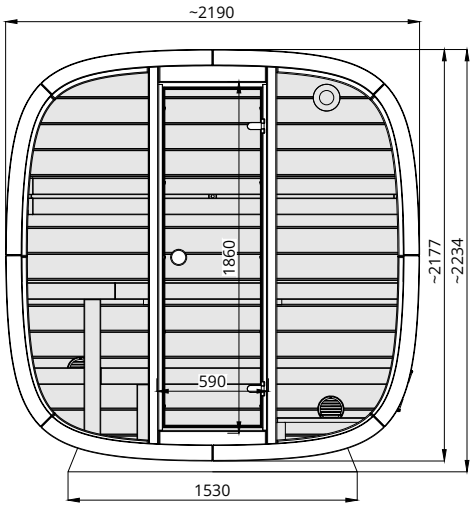


Front view

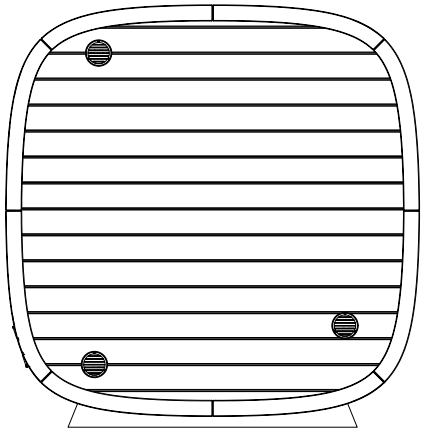

Back view

DICE Sauna POCKET *Scale 1:40* (Square barrel 1.6)
(Front glass wall)

DRW no: DSS Sb2.0 Fgw

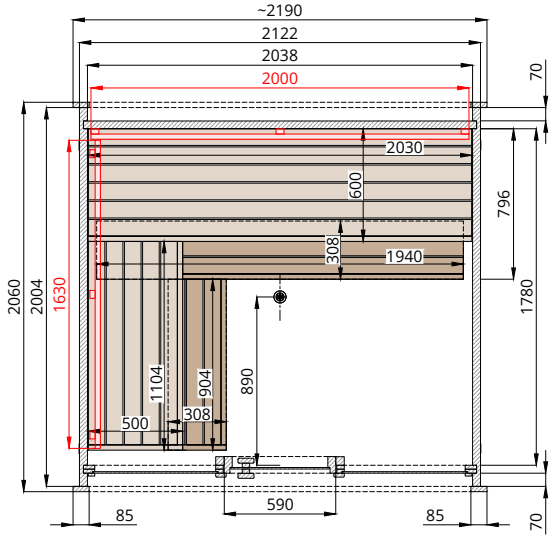


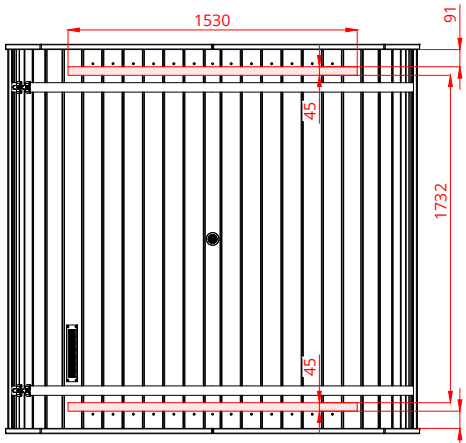


Bottom view

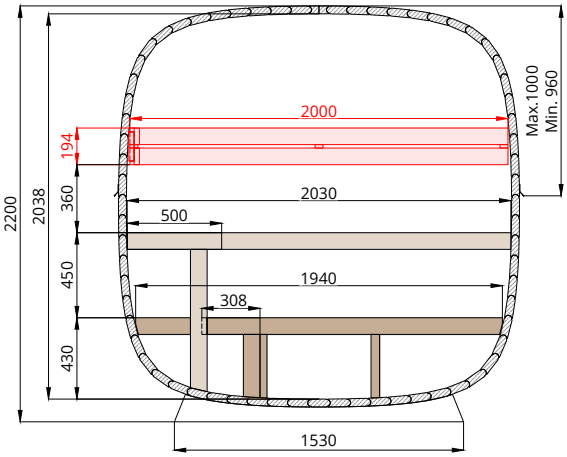


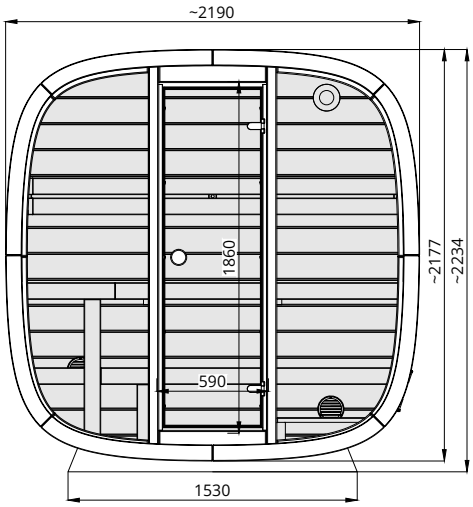


Front view

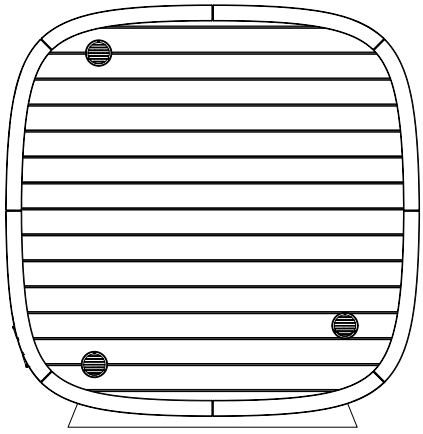

Back view

DICE Sauna SOLO *Scale 1:40* (Square barrel 2.0)
(Front glass wall)

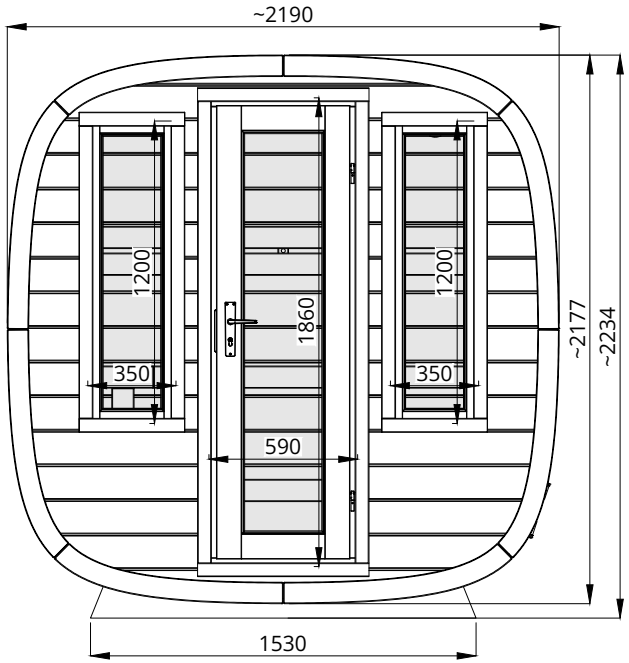


Front view (wooden wall)

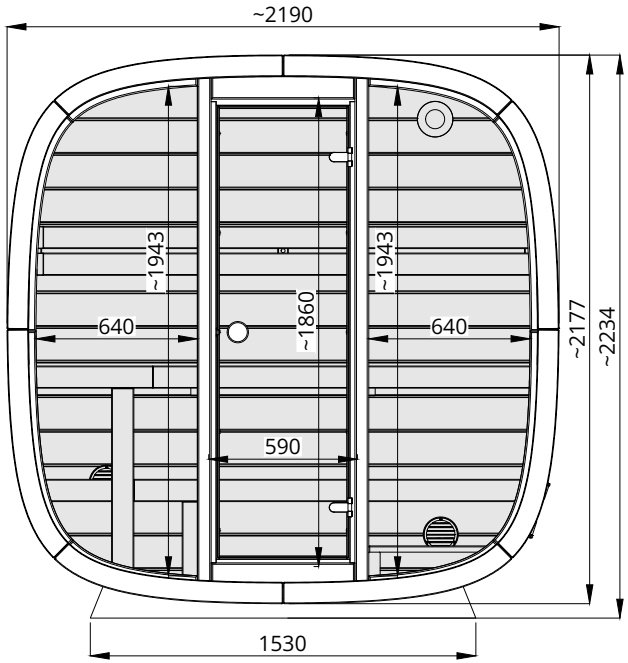


Front view (glass wall)

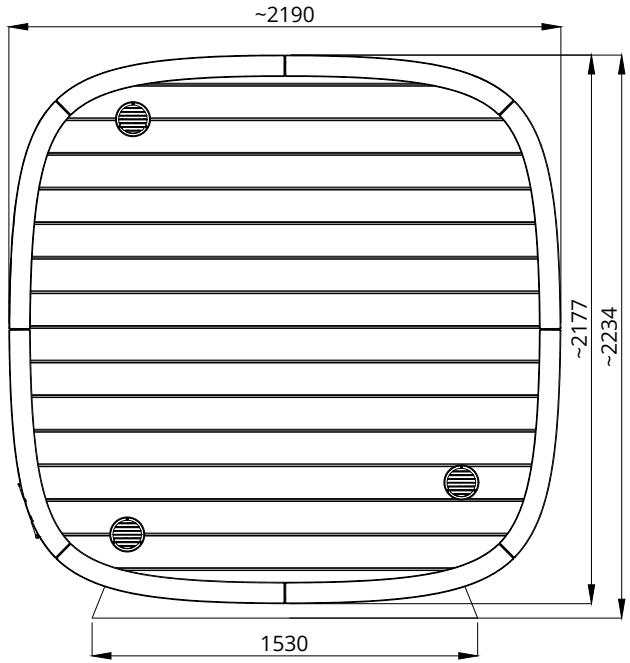


Back view

| Dice Sauna | a | b | c |
|---|---|---|---|
| (POCKET) | ~1660 mm | ~1604 mm | 1332 mm |
| (SOLO) | ~2060 mm | ~2004 mm | 1732 mm |

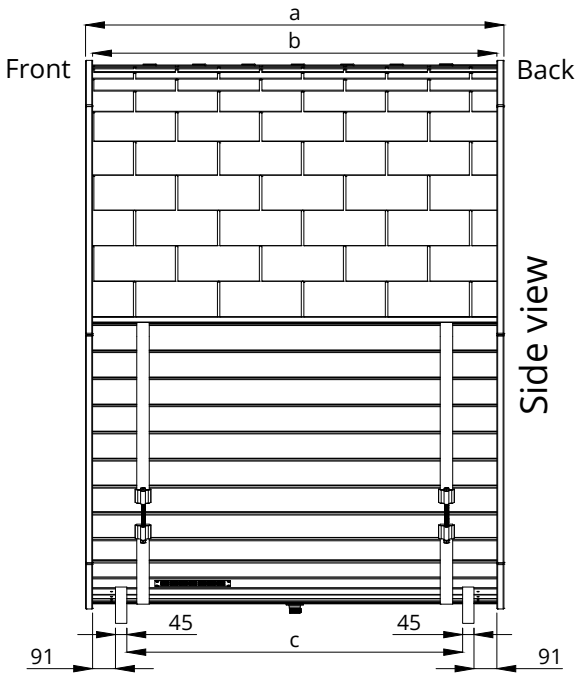


Scale 1 : 30

# Dice Sauna

Exterior construction

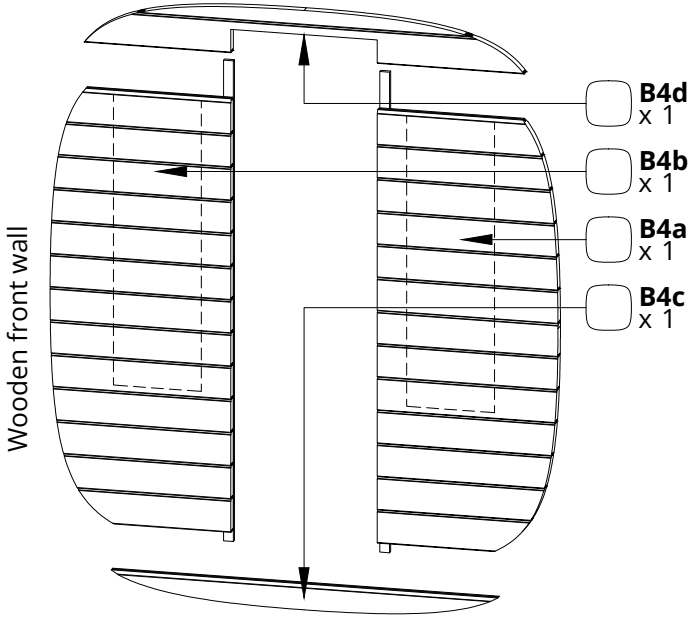


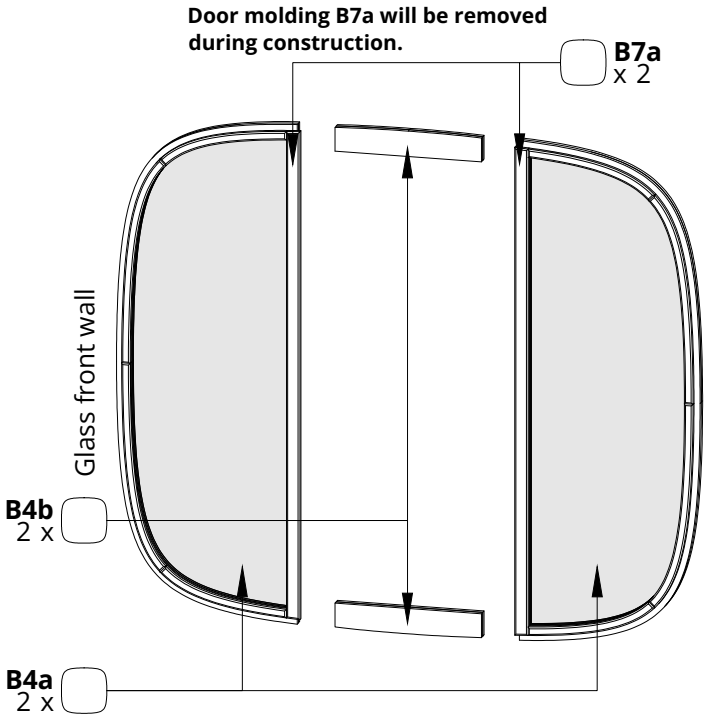


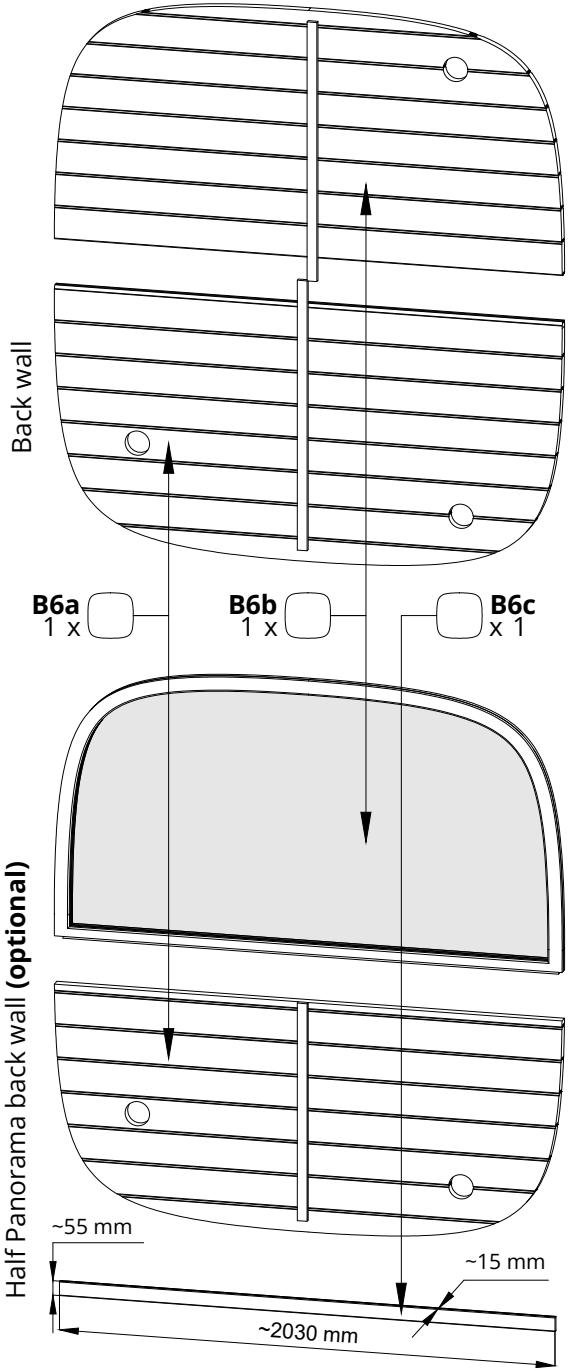


| Dice Sauna | a | b |
|---|---|---|
| (POCKET) | ~1422 mm | ~1604 mm |
| (SOLO) | ~1822 mm | ~2004 mm |

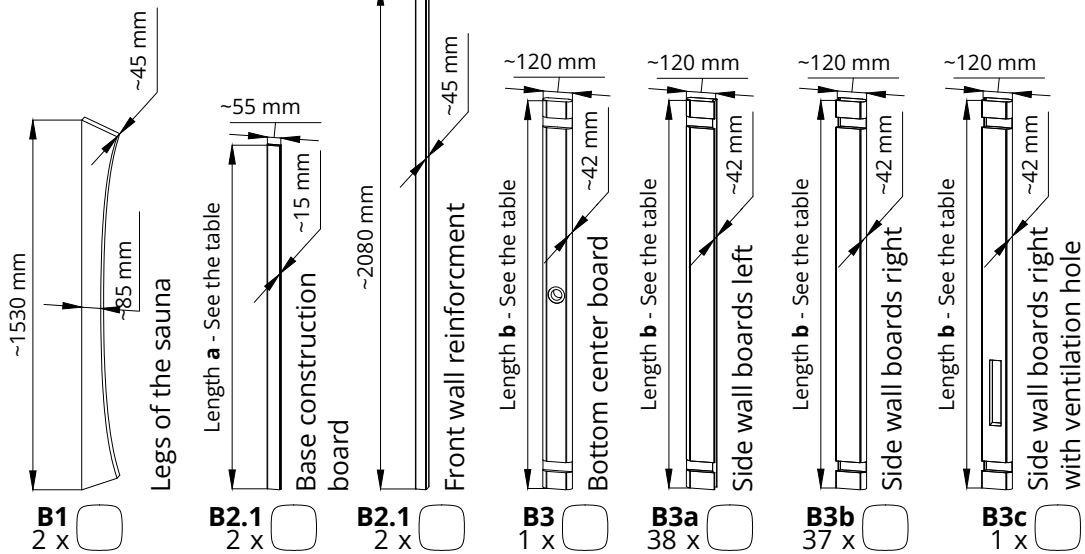


# Detail list 1

Exterior construction

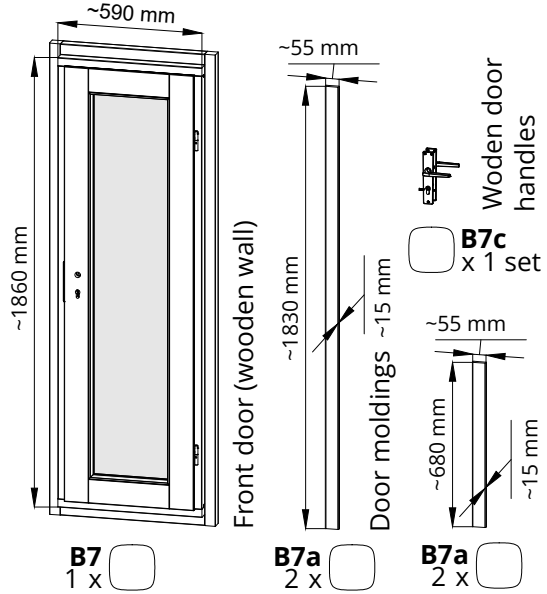


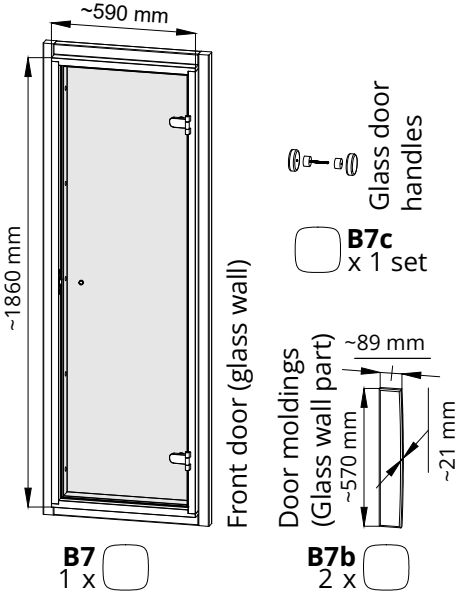


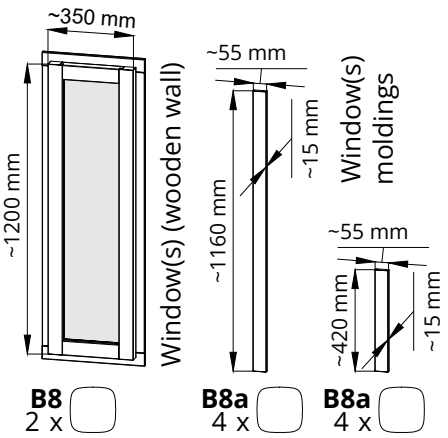


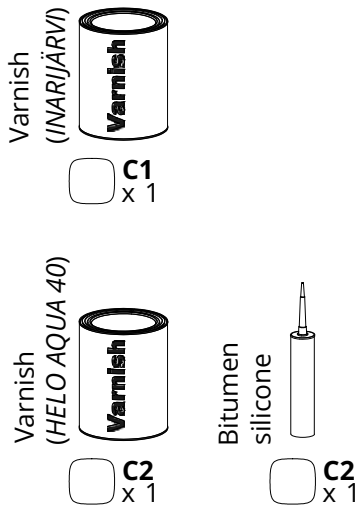


| Dice Sauna | R2 length | R3 | R4 | R5 length |
|---|---|---|---|---|
| (POCKET) | ~1680 mm | 6 | 2.5 | ~1600 mm |
| (SOLO) | ~2080 mm | 8 | 3 | ~2000 mm |

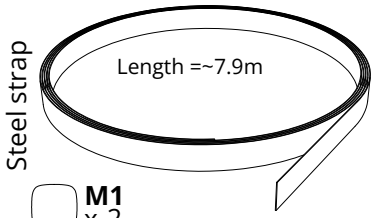


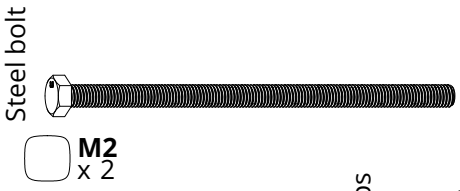


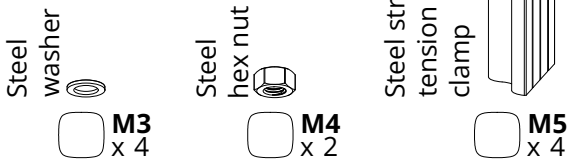


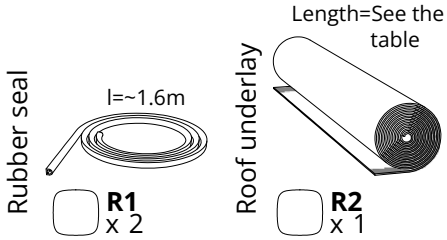


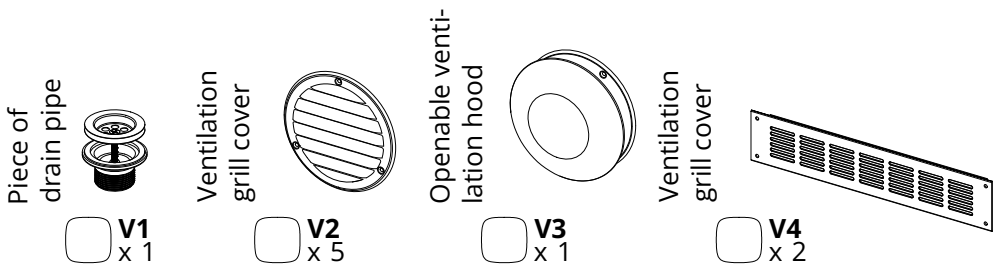


# Detail list 2

Exterior construction

| Name in manual | Nails and screws (Scale 1:2) /Screw size | Area of use | Quantity | |
|---|---|---|---|---|
| S7 | 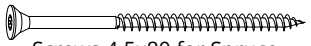 Screws 4,5x80 for Spruce<br>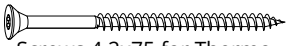 Screws 4,2x75 for Thermo | Mainly for construction inside and outside | 130 | ☐ |
| S6 | 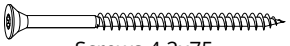 Screws 4,2x75 | For fixing the door(s) | 50 | ☐ |
| S5 | 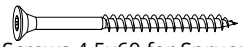 Screws 4,5x60 for Spruce<br>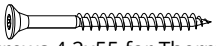 Screws 4,2x55 for Thermo | Mainly for construction inside and outside | 150 | ☐ |
| S4 | 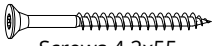 Screws 4,2x55 | For the window(s) | 30 | ☐ |
| S3 | 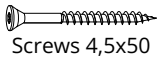 Screws 4,5x50 | For fixing front door moldings (Only for glass wall model) | 10 | ☐ |
| S2 |  Screws 3x40 | For fixing door(s) and window(s) moldings (Only for wooden wall model) | 30 | ☐ |
| S1 |  Screws 3x30 | Mainly for construction inside and outside | 40 | ☐ |
| R6 | 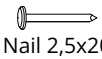 Nail 2,5x20 | During roof installation | 1kg | ☐ |

# Detail list 3

Exterior construction

| | | |
|---|---|---|
| S7 | Screws 4,5x80 for Spruce<br>Screws 4,2x75 for Thermo | 4 |
|  | | |

NB! use a level

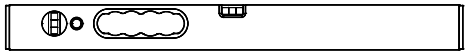

**The base of the sauna must be level!**

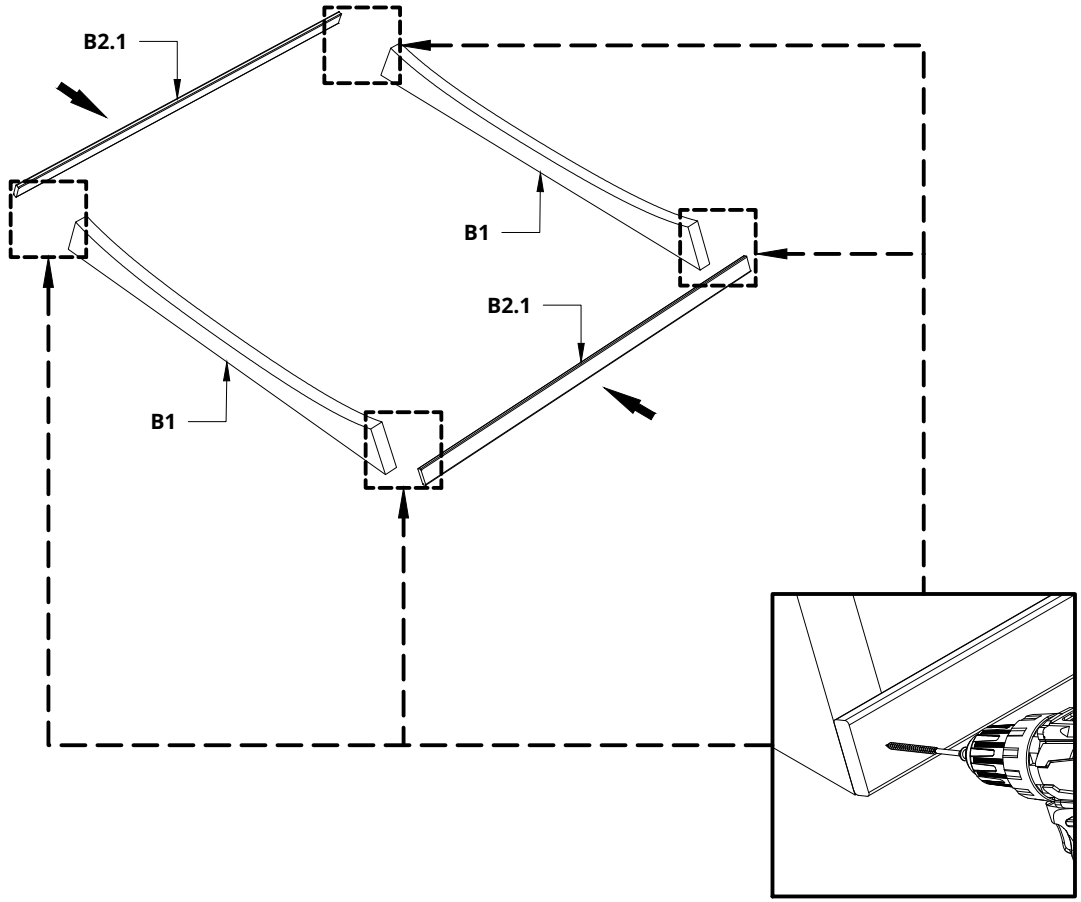


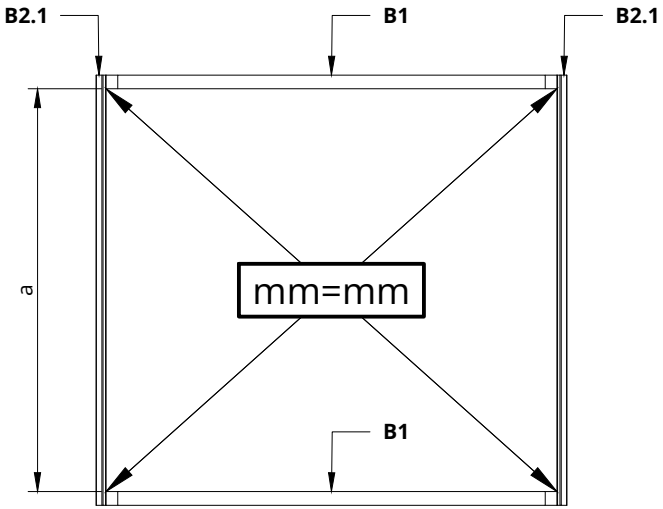


| Dice Sauna | a |
|---|---|
| (POCKET) | 1332 mm |
| (SOLO) | 1732 mm |

| | | |
|---|---|---|
| S7 | Screws 4,5x80 for Spruce<br>Screws 4,2x75 for Thermo | 4 |
|  | | |

**Please countersink the screw head(s)!**

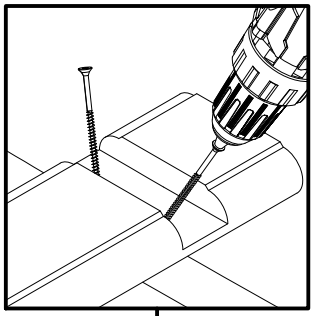

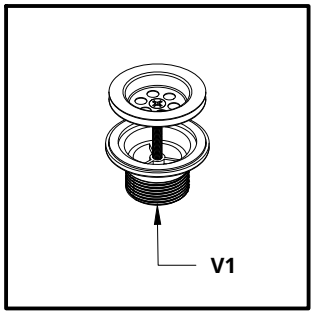


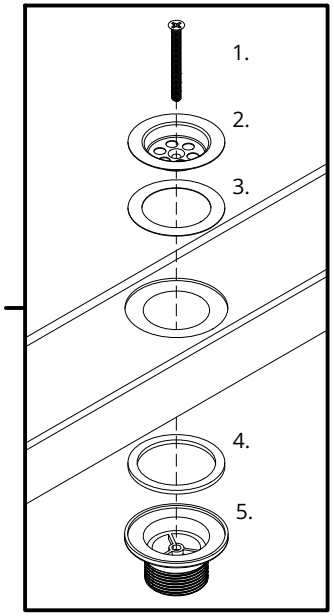


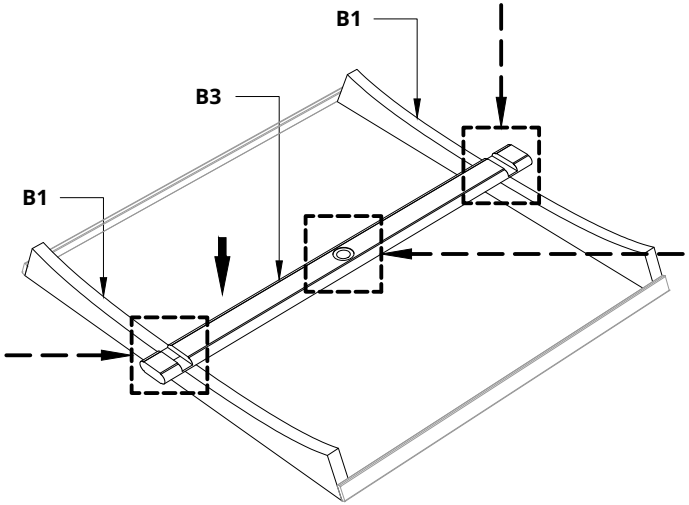


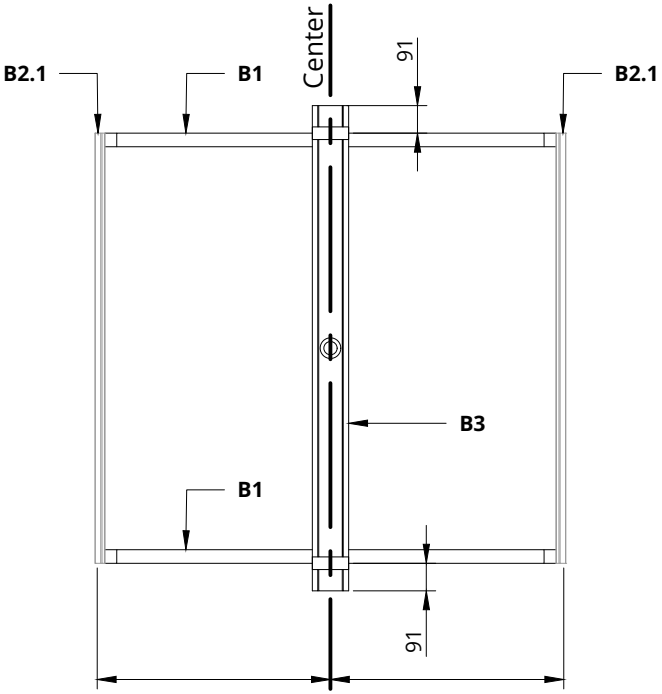


mm=mm

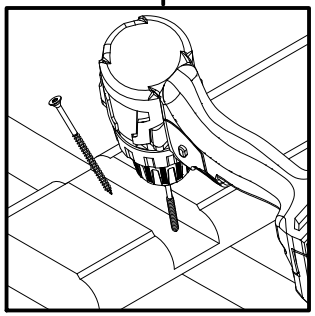

1. Bolt
2. Sieve
3. Soft seal
4. Rubber seal
5. Siphon casing

| | | |
|---|---|---|
| S7 | Screws 4,5x80 for Spruce<br>Screws 4,2x75 for Thermo | 24 |
|  | | |

**Please countersink the screw head(s)!**
**Use a rubber mallet to tap the planks together!**
**Drill 10 mm hole in each plank!**
**Clean the groove from wood waste and other dirt!**
**Cover the grooves with varnish by following the manufacturer's instructions!**

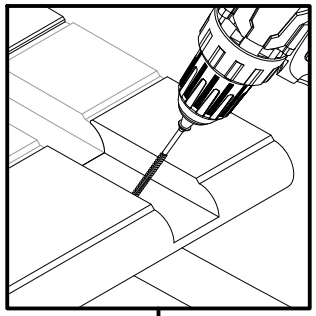

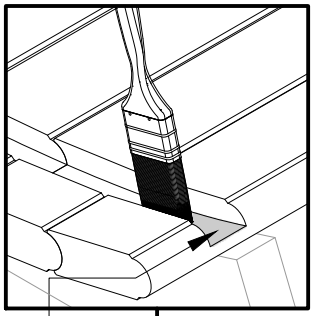

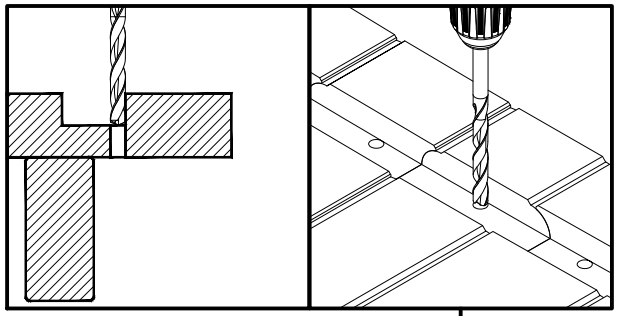




**C1**
Add two coats
of varnish
(*INARIJÄRVI*)

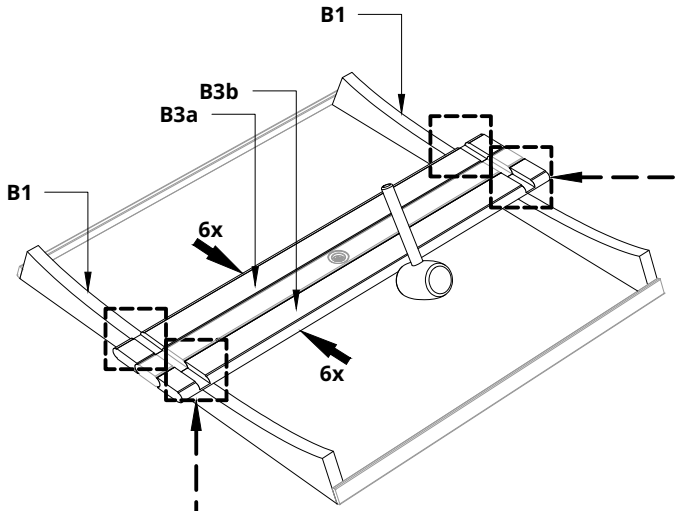


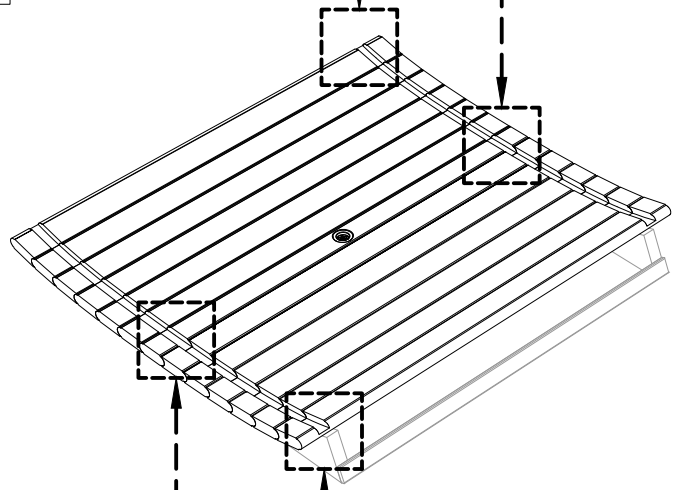

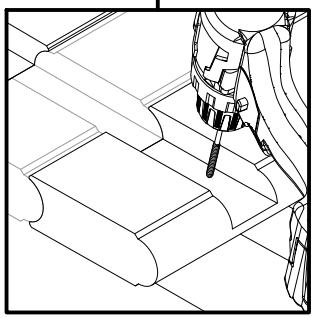

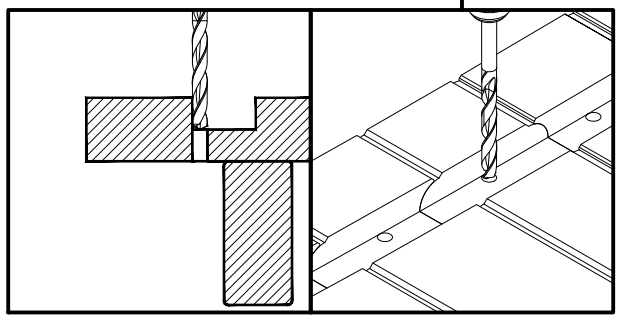

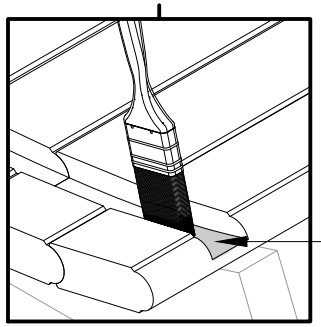




**C1**
Add two coats
of varnish
(*INARIJÄRVI*)

**Clean the floor surface of the room!**
**Cover the floor surface with varnish by following the manufacturer's instructions!**
**Install the rubber seal R1!**
**Remove boards B2.1!**

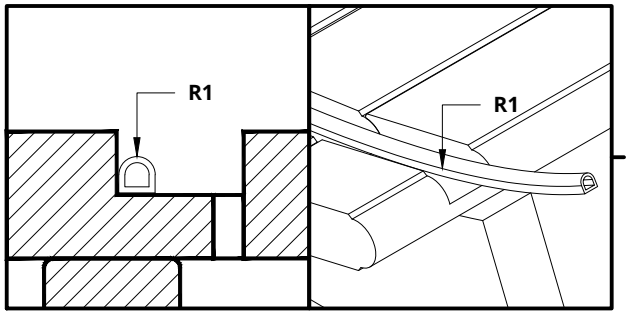


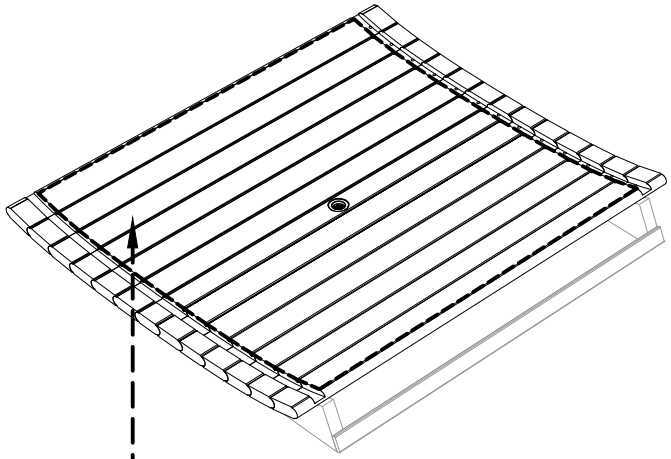

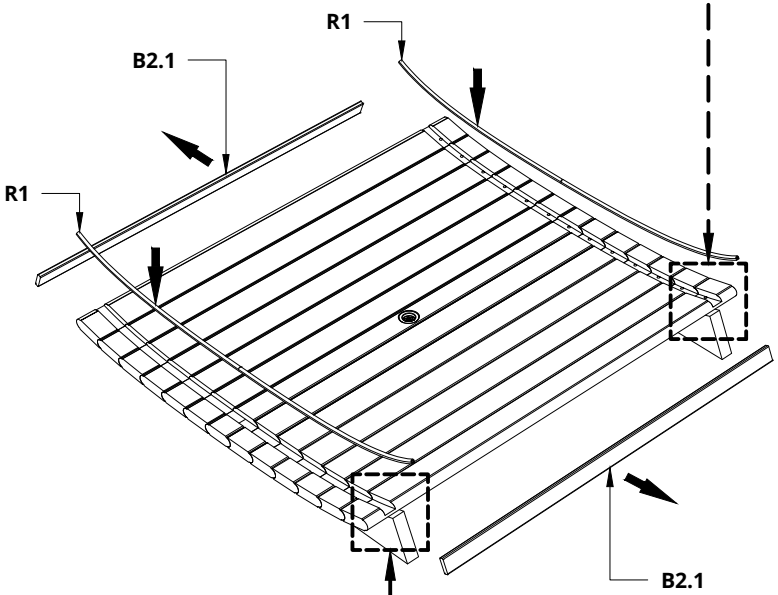


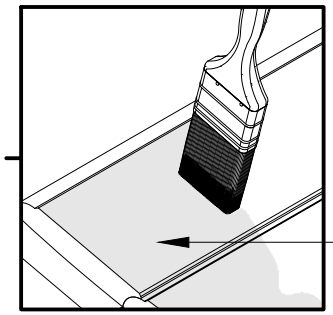




**C2**
Add two or three coats of varnish (*HELO AQUA 40*)

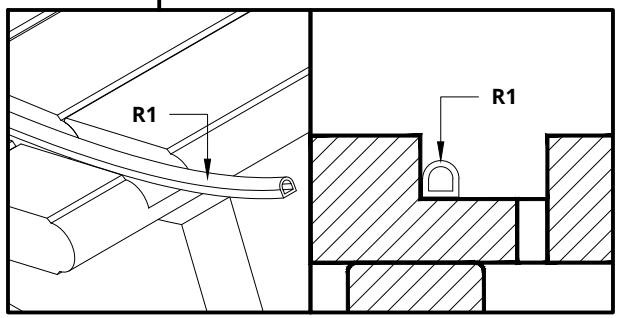

| | | |
|---|---|---|
| S7 | Screws 4,5x80 for Spruce<br>Screws 4,2x75 for Thermo | 4 |
| S5 | Screws 4,5x60 for Spruce<br>Screws 4,2x55 for Thermo | 4 |
|  | | |

**Please countersink the S7 screw head(s)!**
**Assemble the wall!**
**Clean edge of the wall from wood waste and other dirt!**
**Varnish the edge of the wall from the bottom half!**

***To assemble the glass wall, see page 7.***

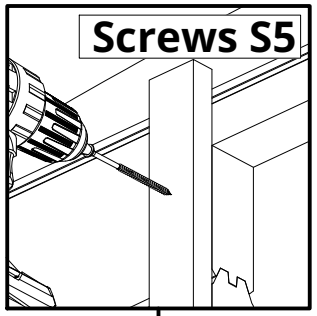


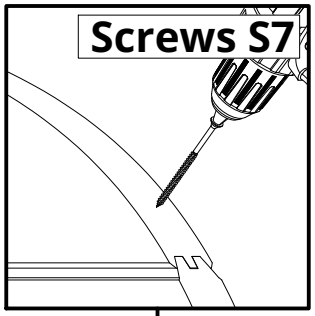


**PAY ATTENTION TO THE DIRECTION OF THE WALLS**

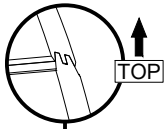


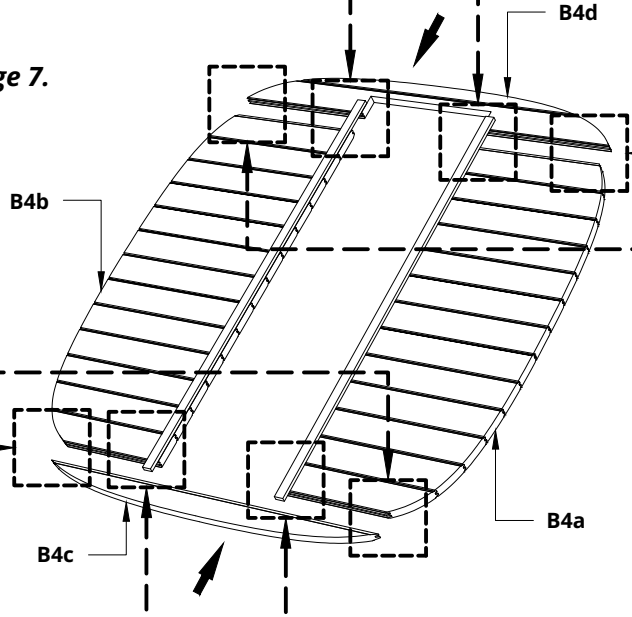


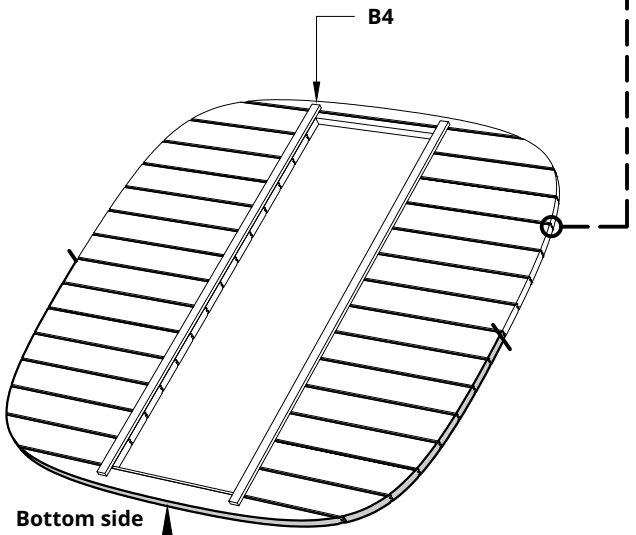


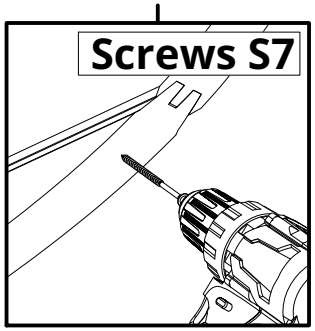


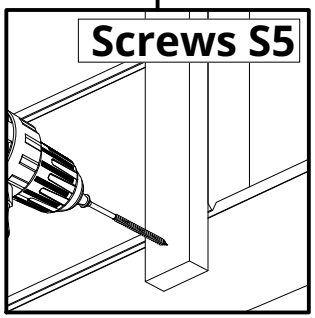


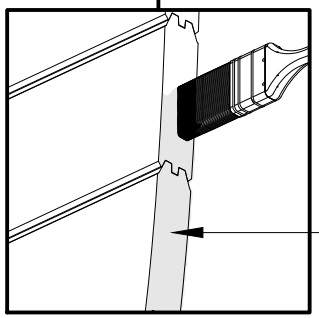




**C1**
Add two coats of varnish
(*INARIJÄRVI*)

| | | |
|---|---|---|
| S7 | Screws 4,5x80 for Spruce<br>Screws 4,2x75 for Thermo | 2 |
| S5 | Screws 4,5x60 for Spruce<br>Screws 4,2x55 for Thermo | 2 |
|  | | |

**Please countersink the S7 screw head(s)!**
**Assemble the wall!**
**Clean edge of the wall from wood waste and other dirt!**
**Varnish the edge of the wall from the bottom half!**

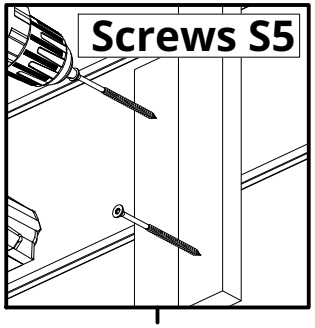


**PAY ATTENTION TO THE DIRECTION OF THE WALLS**

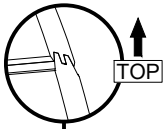


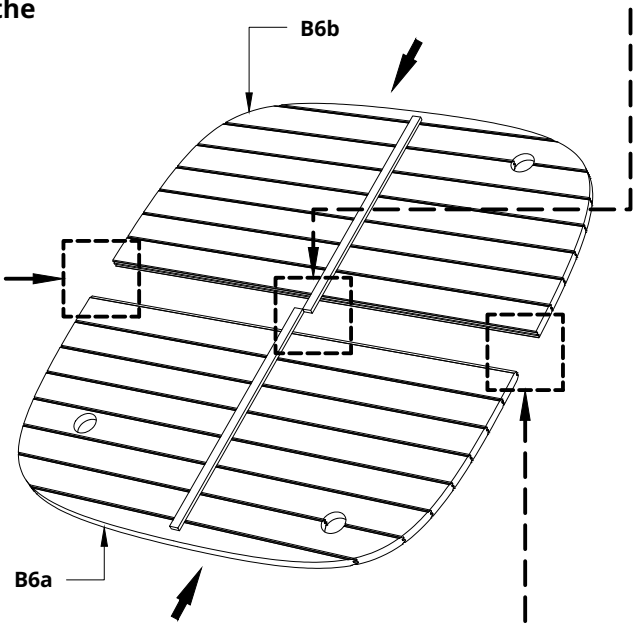


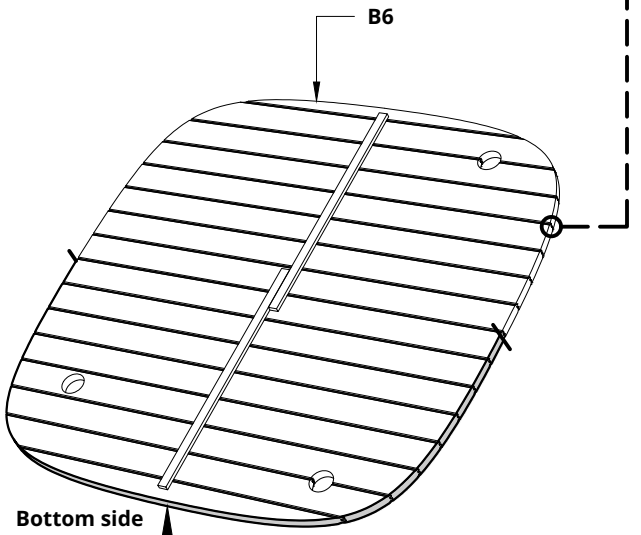


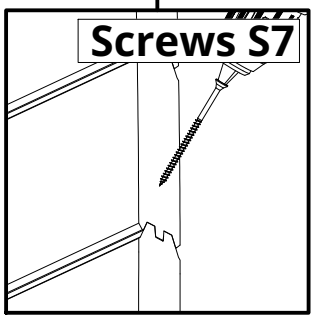


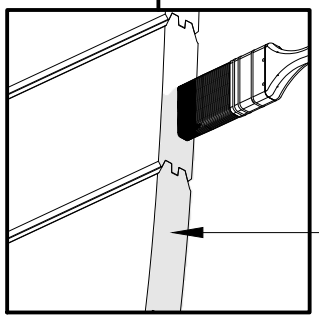




**C1**
Add two coats of varnish
(*INARIJÄRVI*)

| S5 | Screws 4,5x60 for Spruce<br>Screws 4,2x55 for Thermo | 12 |
|---|---|---|



***Only necessary for a glass wall version!***

**Please countersink the screw head(s)!**
**Assemble the wall!**
**Use glue between the wall pieces!**
**Let the glue dry according to the glue manufacturer's recommendations!**
**Clean edge of the wall from wood waste and other dirt!**
**Varnish the edge of the wall from the bottom half!**

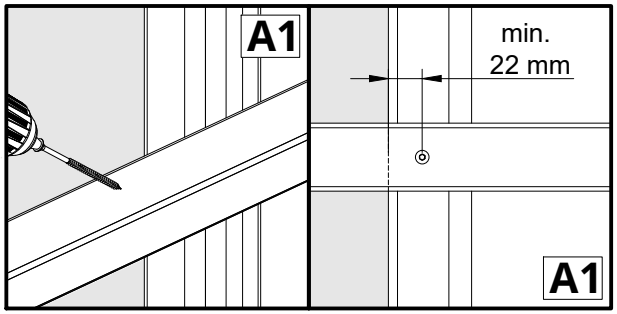


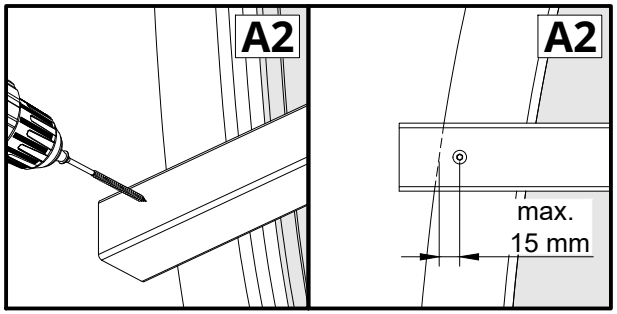


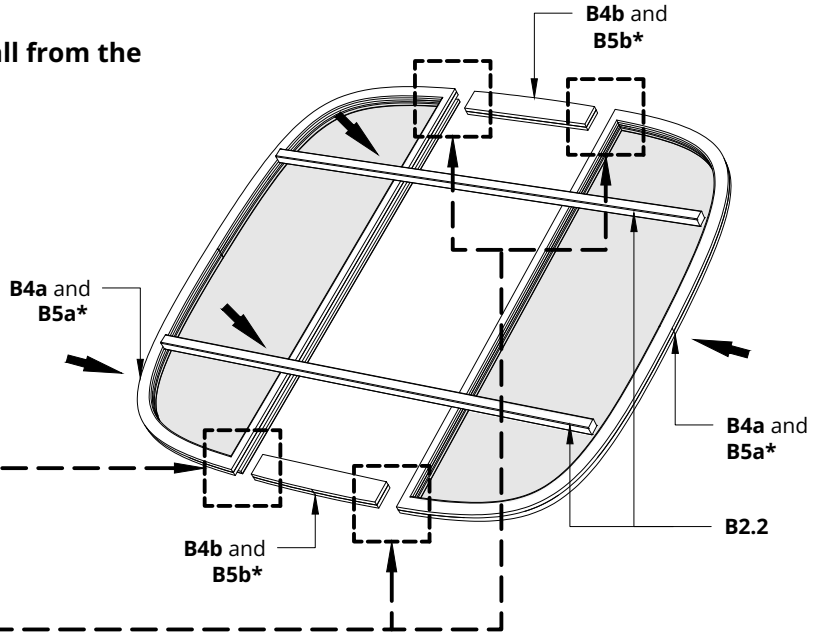


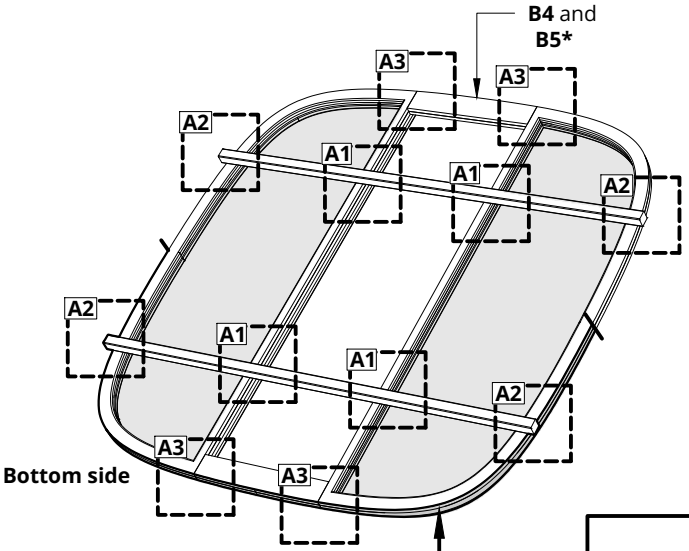


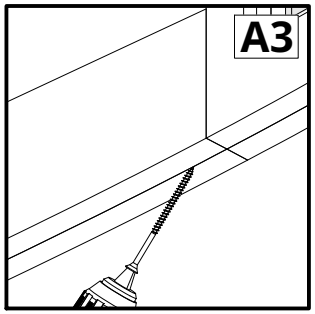


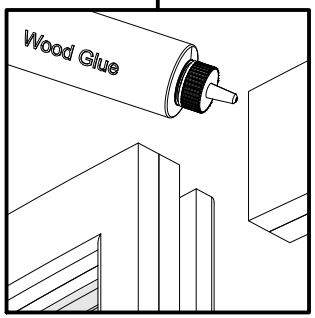


**C1**
Add two coats
of varnish
(*INARIJÄRVI*)




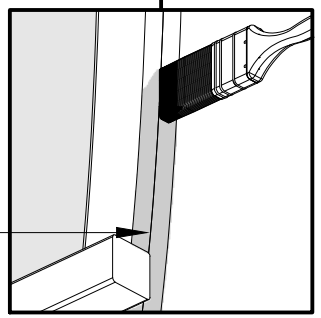

| | | |
|---|---|---|
| S5 | Screws 4,5x60 for Spruce<br>Screws 4,2x55 for Thermo | 8 |
|  | | |

NB! use a level

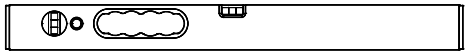

*** Depends on the choice of sauna wall!**

**Please countersink the screw head(s)!**
**Make sure that the walls are centered in relation to the bottom!**
**Install safety boards on walls!**

**PAY ATTENTION TO THE DIRECTION OF THE WALLS**

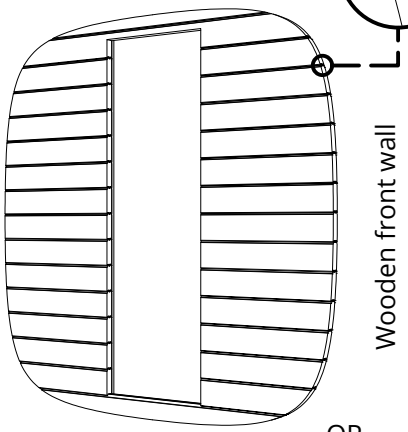


*B4 depends on the choice of sauna front walls*

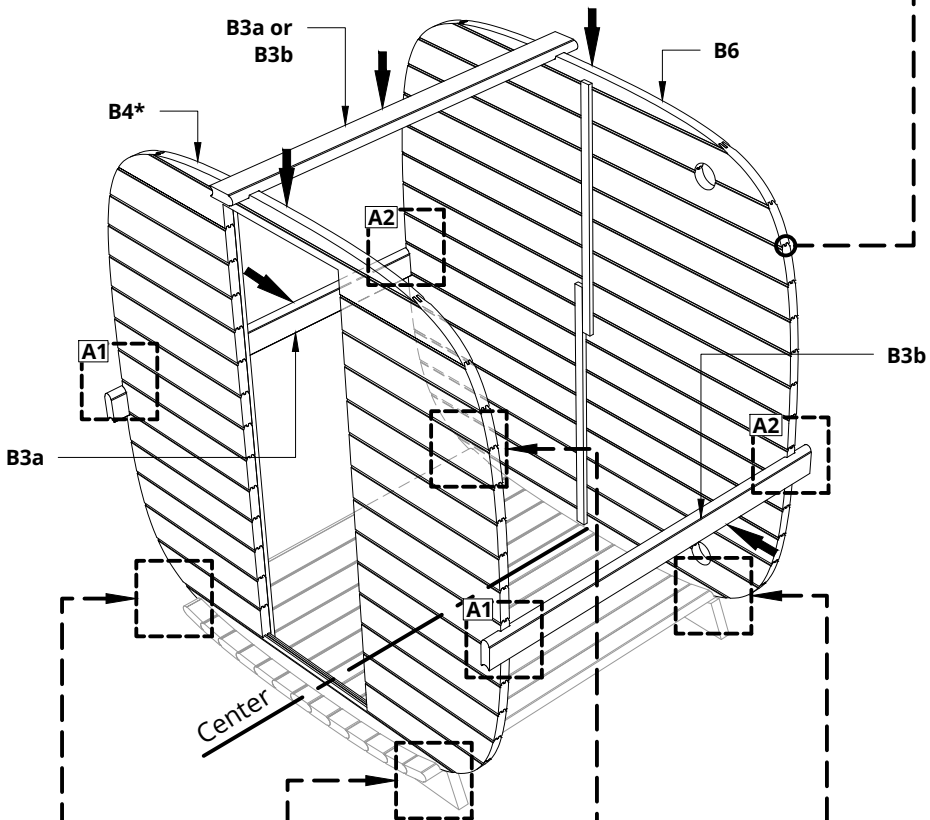


**PAY ATTENTION TO THE DIRECTION OF THE WALLS**

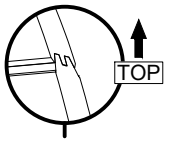


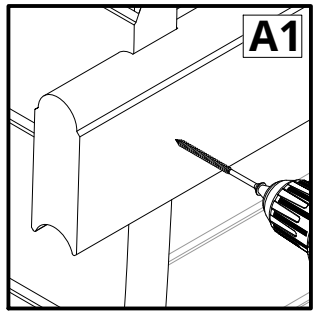


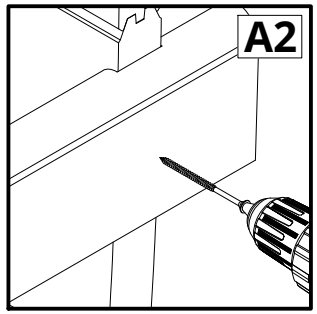


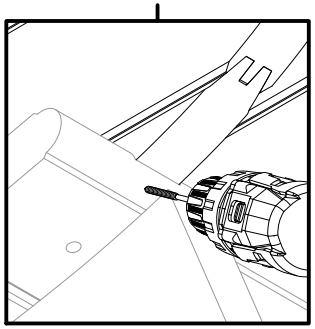

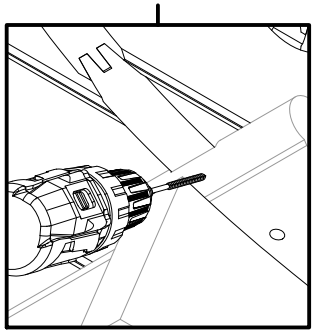

| | | |
|---|---|---|
| S5 | Screws 4,5x60 for Spruce<br>Screws 4,2x55 for Thermo | 104 |
|  | | |

*** Depends on the choice of sauna wall!**
**** For glass wall only!**

**Please countersink the screw head(s)!**
**Use a rubber mallet to tap the planks into place!**
**Please do not screw the screws in on the last whole blanks immediately!**

*B4 depends on the choice of sauna front walls*

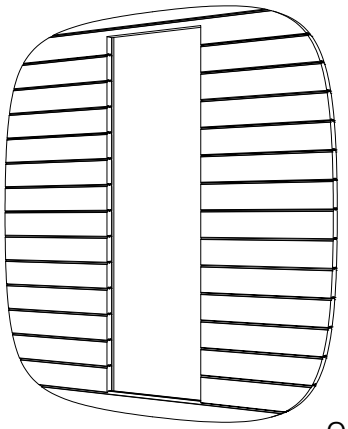

Wooden front wall

OR

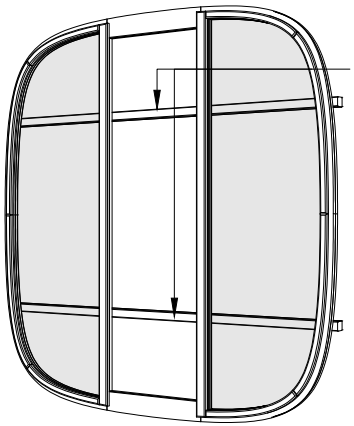

Glass front wall

**** If they start to interfere, they can be removed**

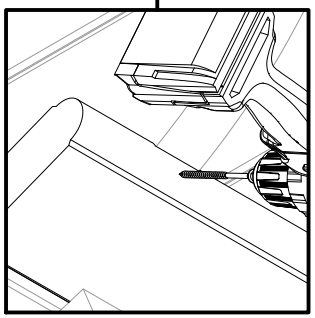

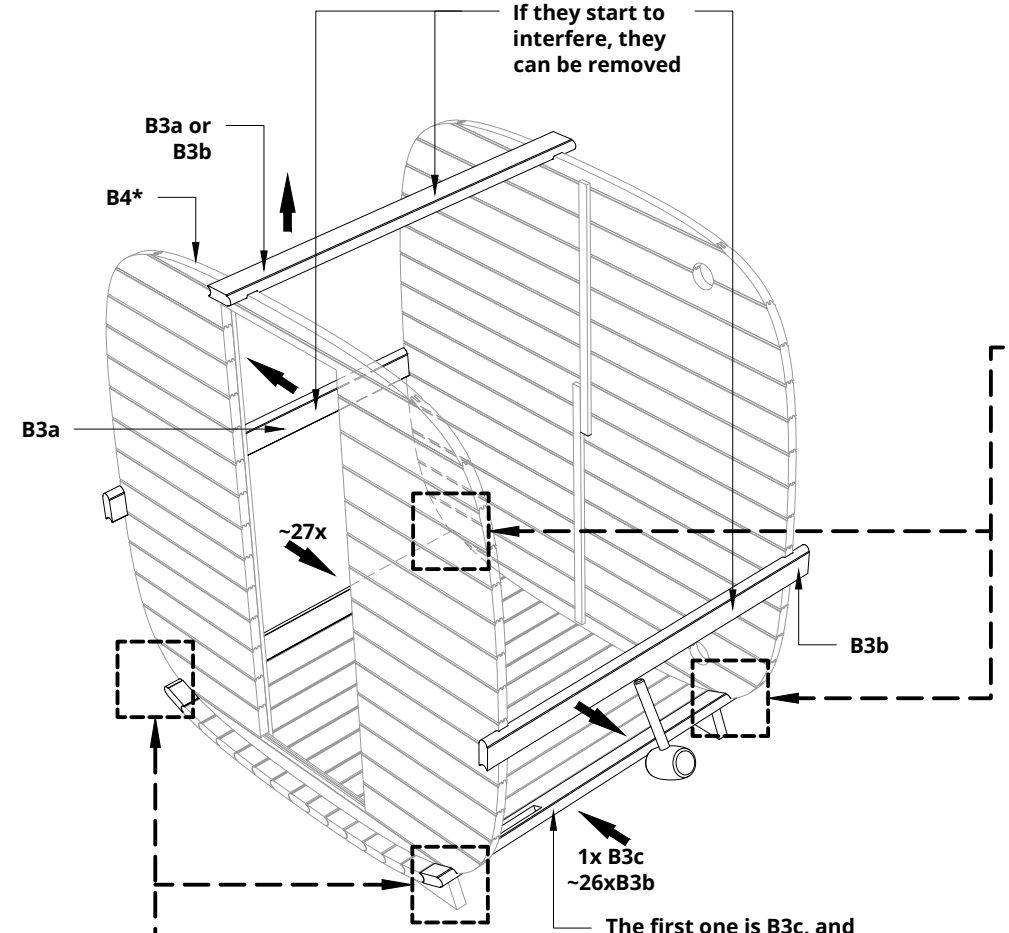


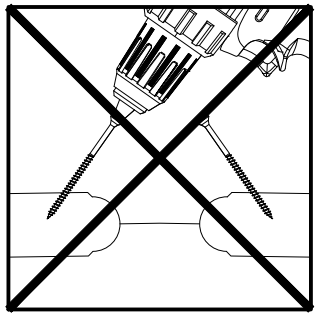

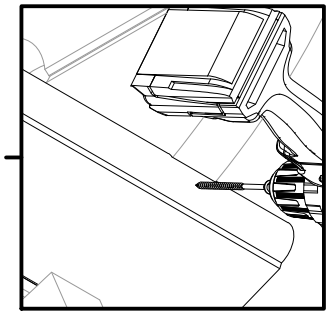

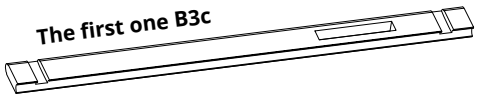




# Dice Sauna

## Panorama wall installation guide

Dice Sauna (POCKET and SOLO)
Compatible with both glass wall and wood wall construction options.



| | | |
|---|---|---|
| S5 | Screws 4,5x60 for Spruce<br>Screws 4,2x55 for Thermo | 8 |
|  | | |

NB! use a level

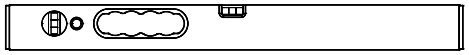

*** Depends on the choice of sauna wall!**

**Please countersink the screw head(s)!**
**Make sure that the walls are centered in relation to the bottom!**
**Install safety boards on walls!**

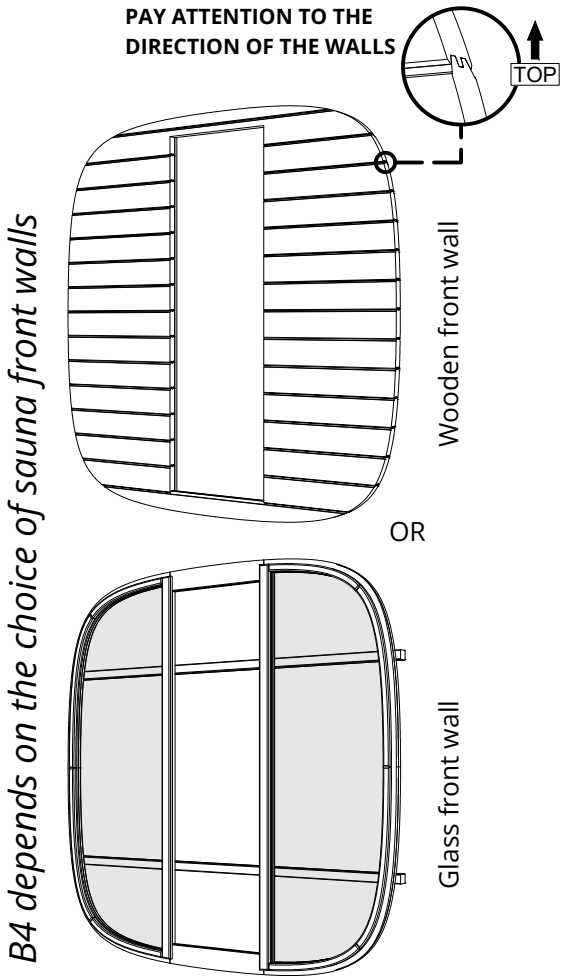


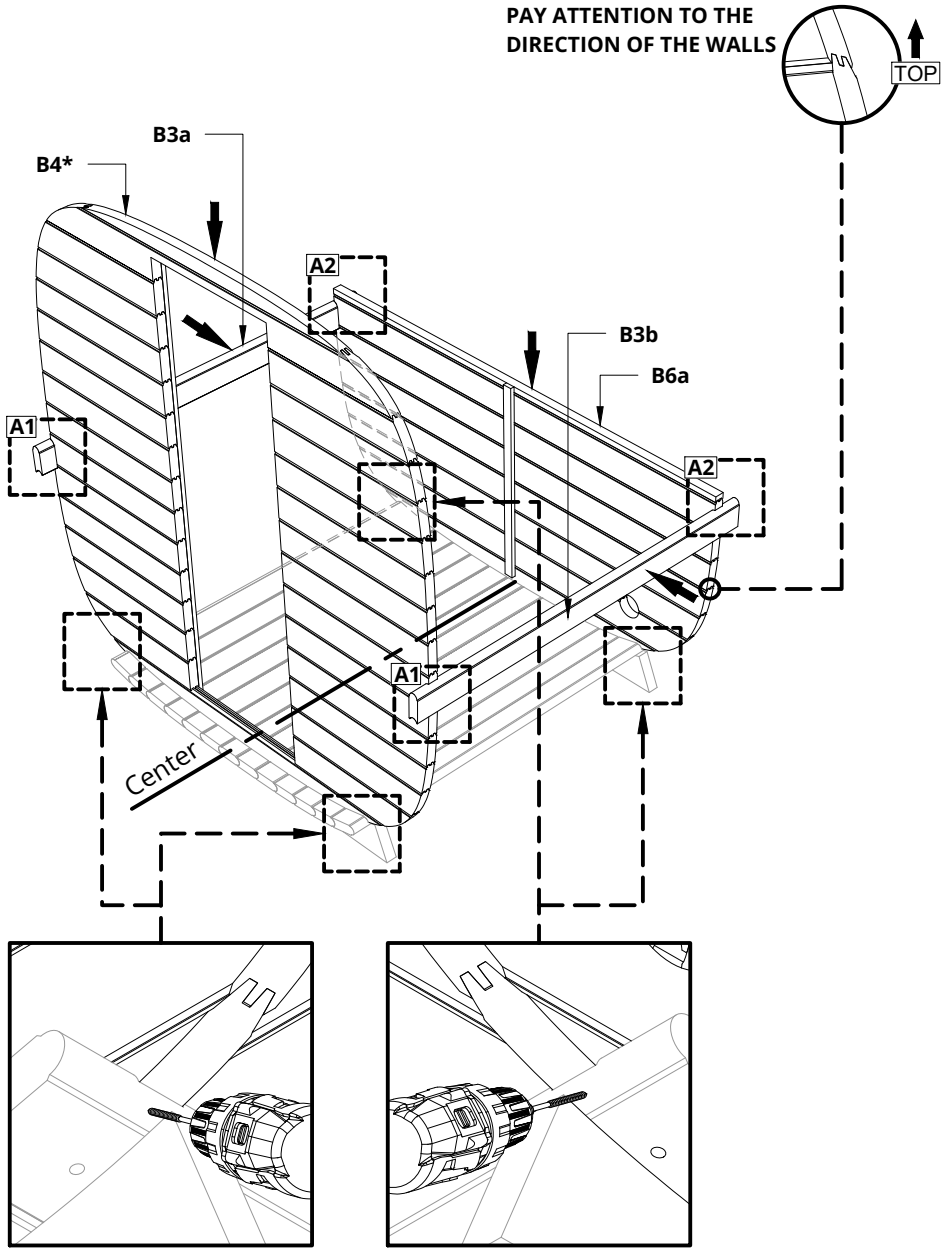


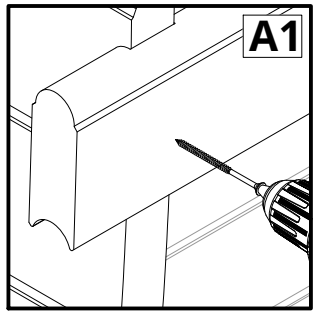


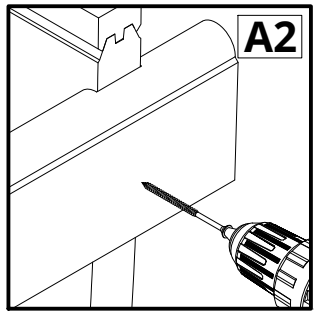

| | | |
|---|---|---|
| S5 | Screws 4,5x60 for Spruce<br>Screws 4,2x55 for Thermo | 36 |
|  | | |

*** Depends on the choice of sauna wall!**
**** For glass wall only!**

**Please countersink the screw head(s)!**
**Use a rubber mallet to tap the planks into place!**
**Please do not screw the screws in on the last whole blanks immediately!**

*B4 depends on the choice of sauna front walls*

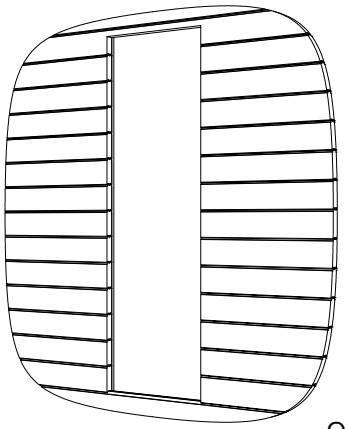

Wooden front wall

OR

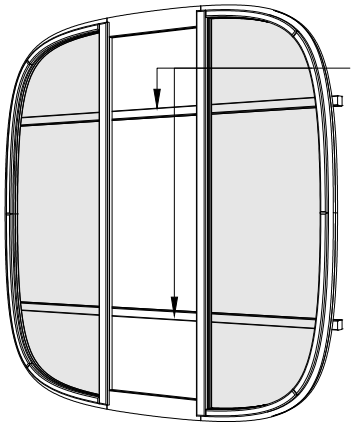

**** If they start to interfere, they can be removed**

Glass front wall

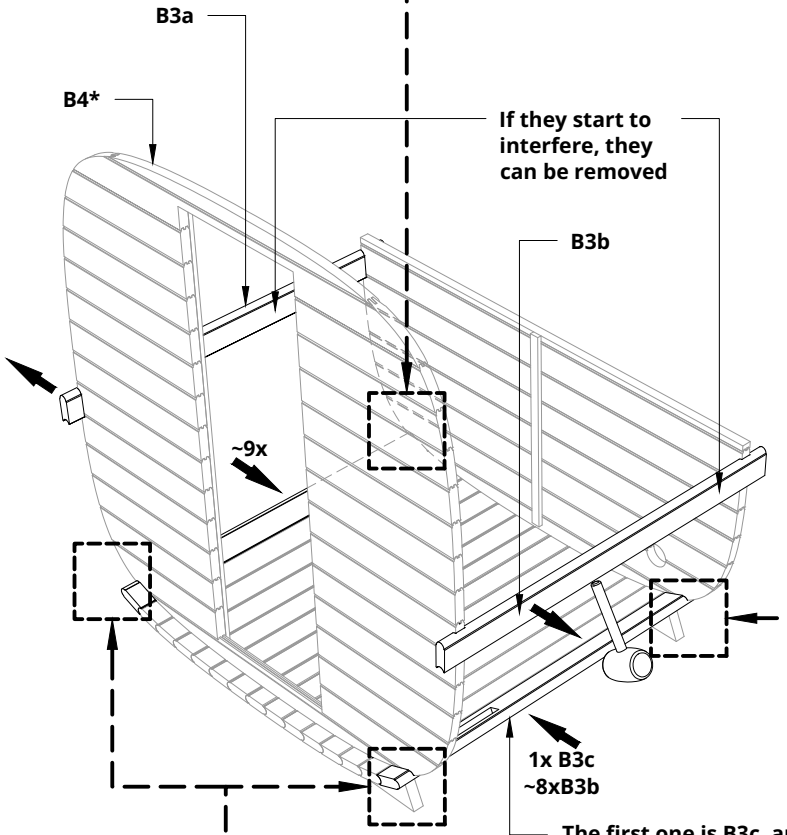


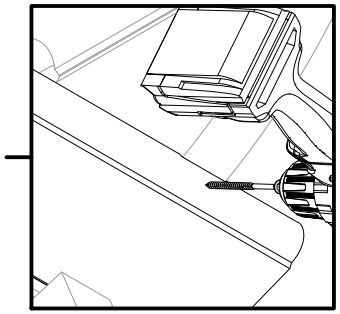

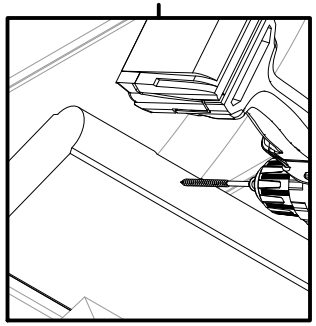

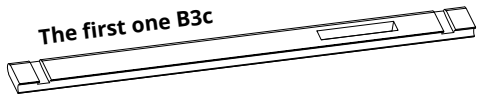


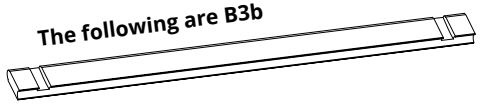

| | | |
|---|---|---|
| S2 | Screws 3x40 | 5 |
| S5 | Screws 4,5x60 for Spruce<br>Screws 4,2x55 for Thermo | 6 |
|  | | |

NB! use a level

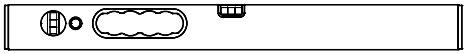

**Please countersink the screw head(s)!**
**Install the upper part of the panorama wall!**
**Install safety boards on walls!**
**Install the gap cover strip!**

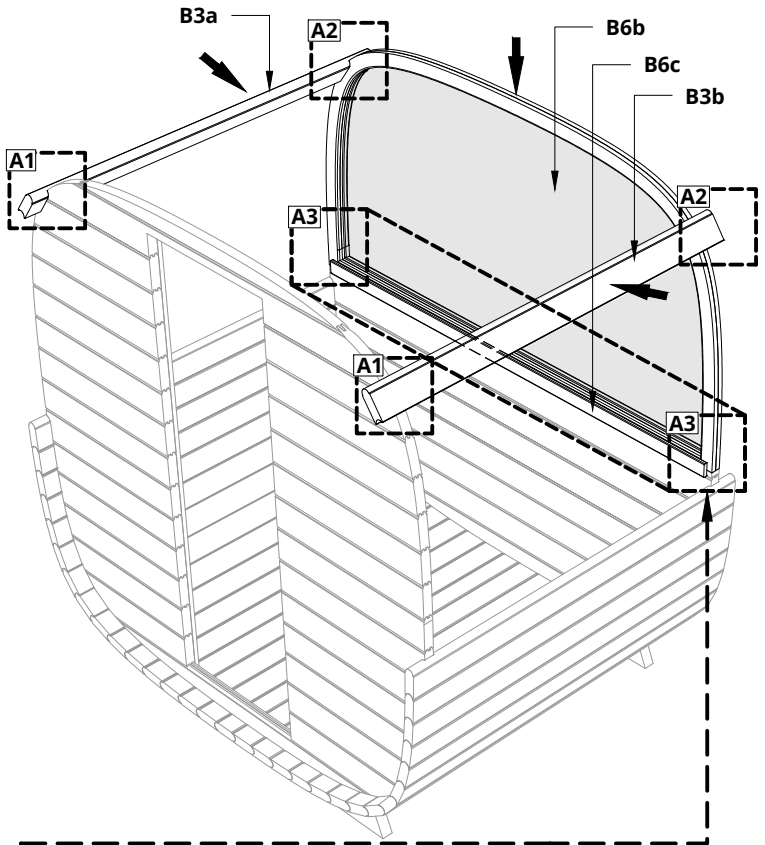


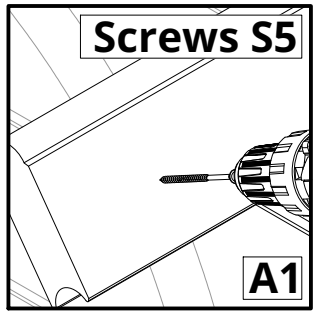


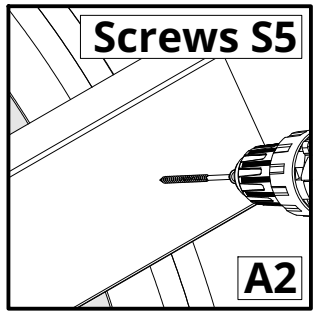


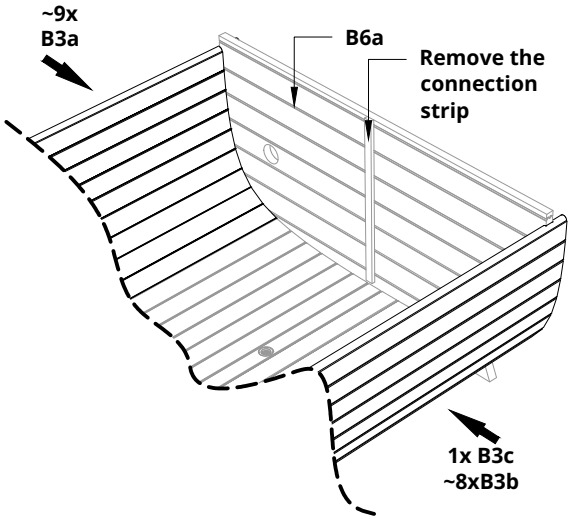


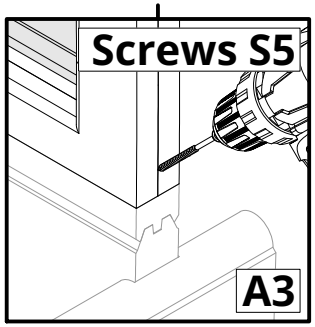


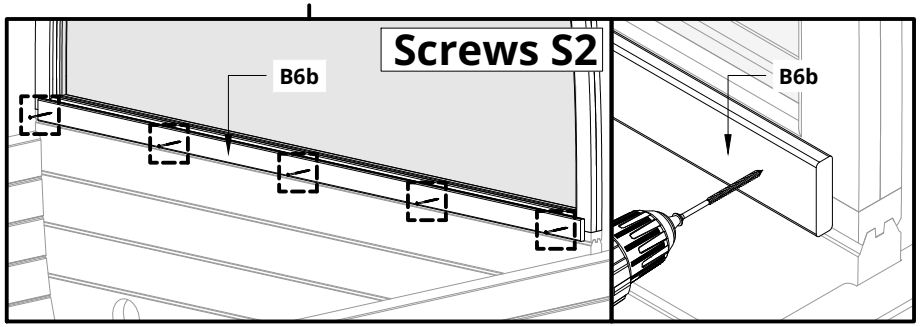

| | | |
|---|---|---|
| S5 | Screws 4,5x60 for Spruce<br>Screws 4,2x55 for Thermo | 72 |
|  | | |

*** Depends on the choice of sauna wall!**
**** For glass wall only!**

**Please countersink the screw head(s)!**
**Continue with the construction of the side walls!**
**Please do not screw the screws in on the last whole blanks immediately!**

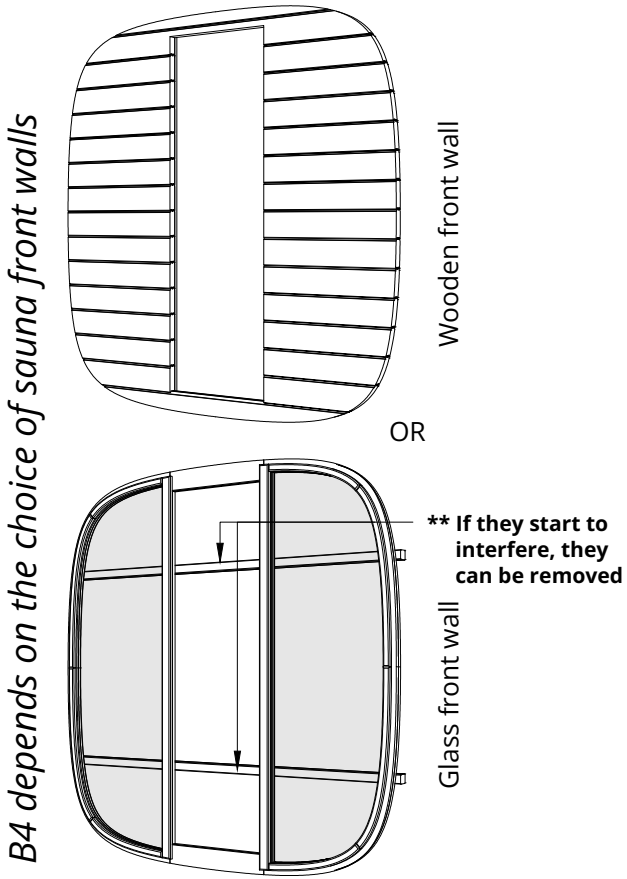


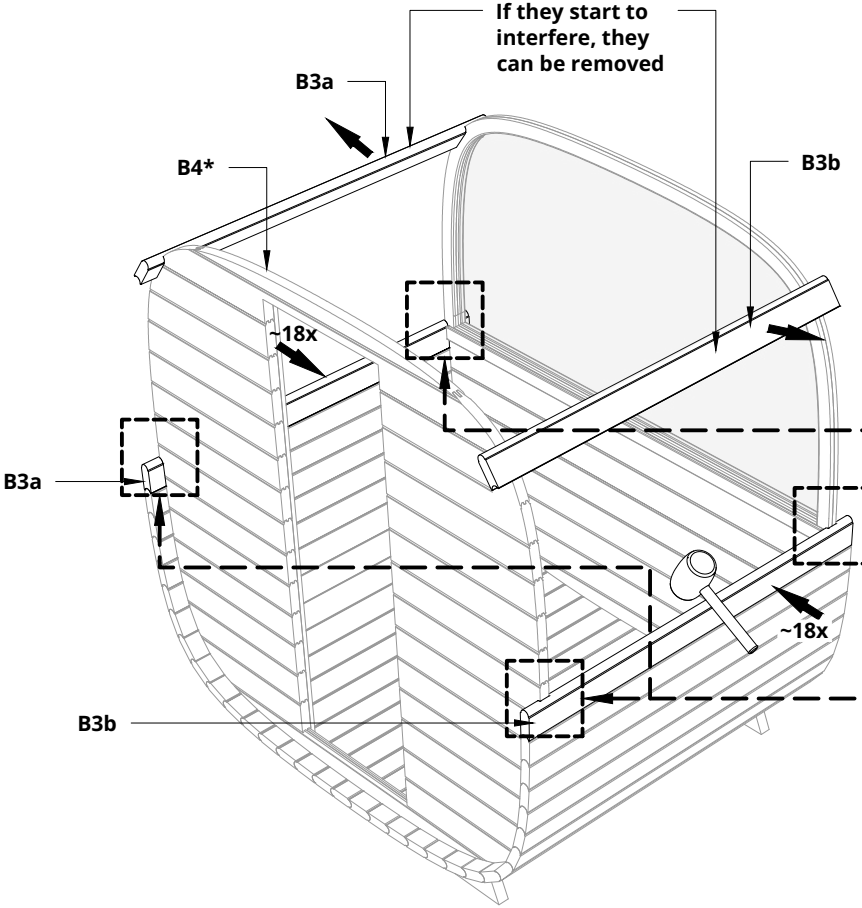


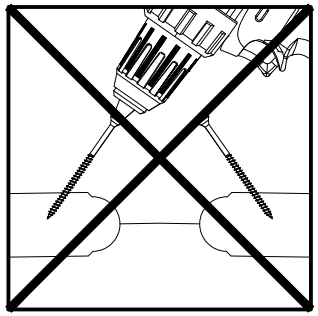

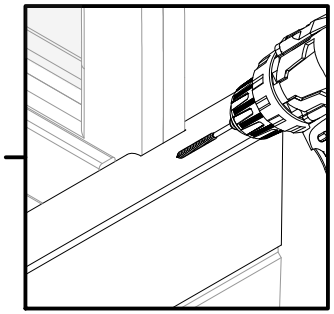

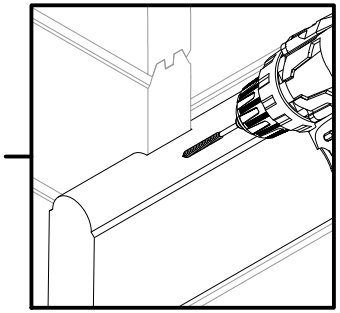

**Continue in the external construction guide, p. 10**

**Measure the gap front and back, the dimensions can be different!**

Divide the measurement by two and transfer the measurements to the last two planks. Connect the dimensions on the plank with a line.

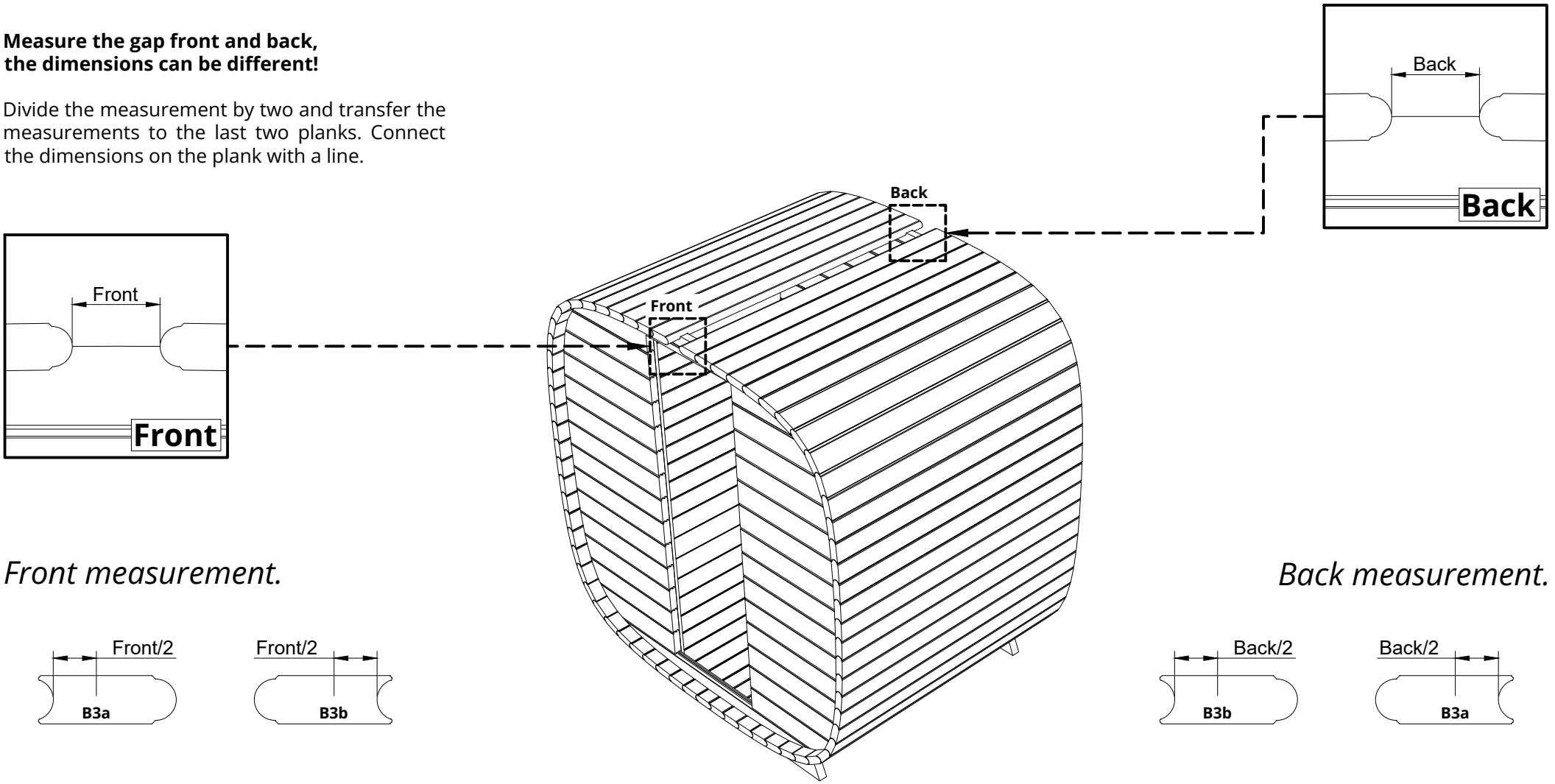


*Front measurement.*




*Back measurement.*




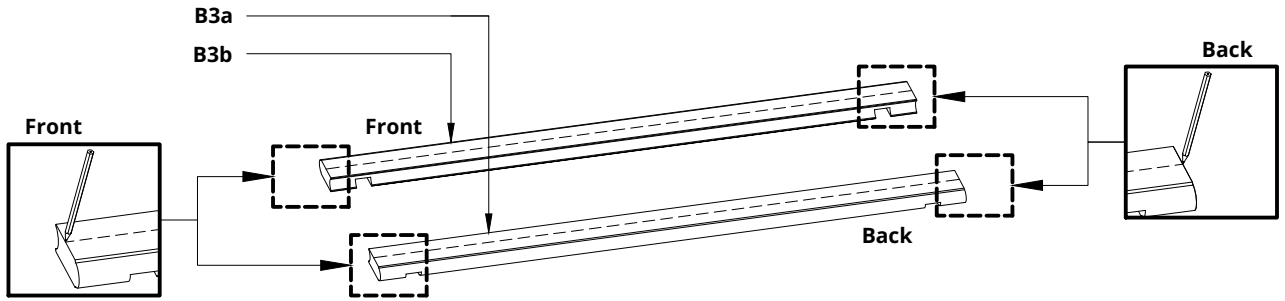

| | | |
|---|---|---|
| S2...7 | Screws<br>3x40 ... 4,5x80 | 8 |
| S5 | Screws 4,5x60 for Spruce<br>Screws 4,2x55 for Thermo | 6 |
|  | | |

**Please countersink the screw head(s)!**
**Prepare the last plank!**
**Use a rubber mallet to tap the planks in to the cap!**

Cut along the marked line to cut off these ends. Glue the two cut boards with wood glue and connect them with 8 pieces of 3x40 ... 4.5x80 screws (the length of the screws depends on the final width of the last two planks cut). Wipe off excess glue with a cloth and then use sandpaper to smooth out the gap.

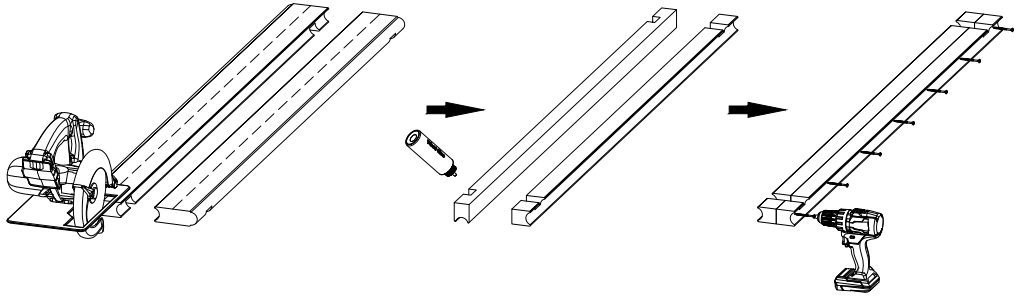

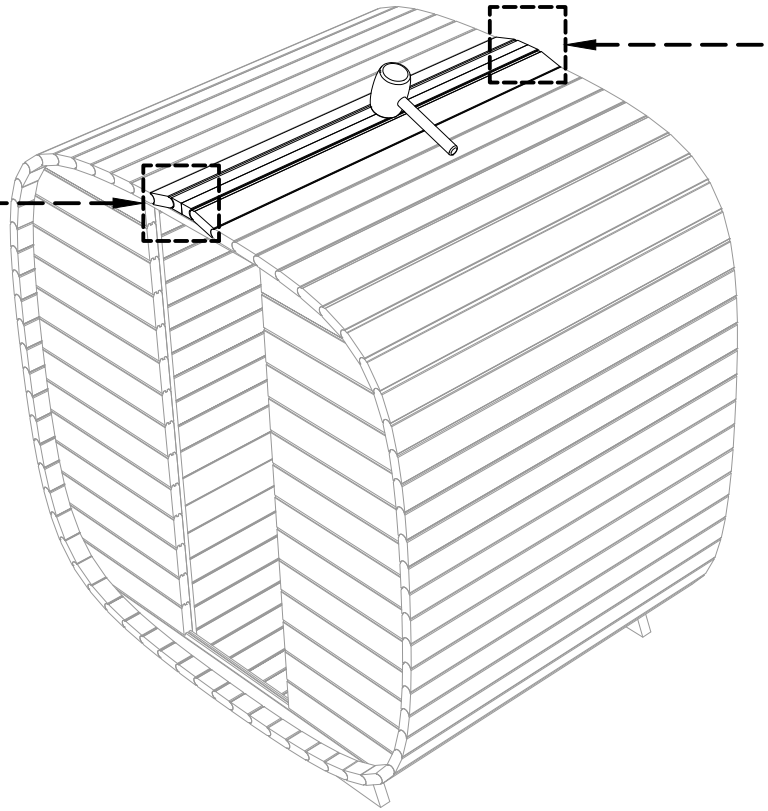

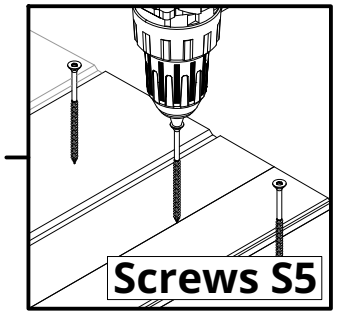


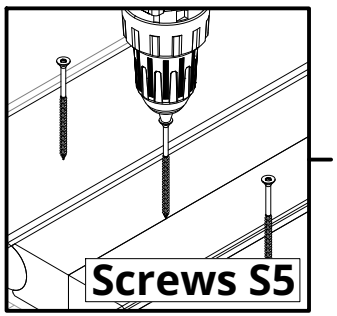

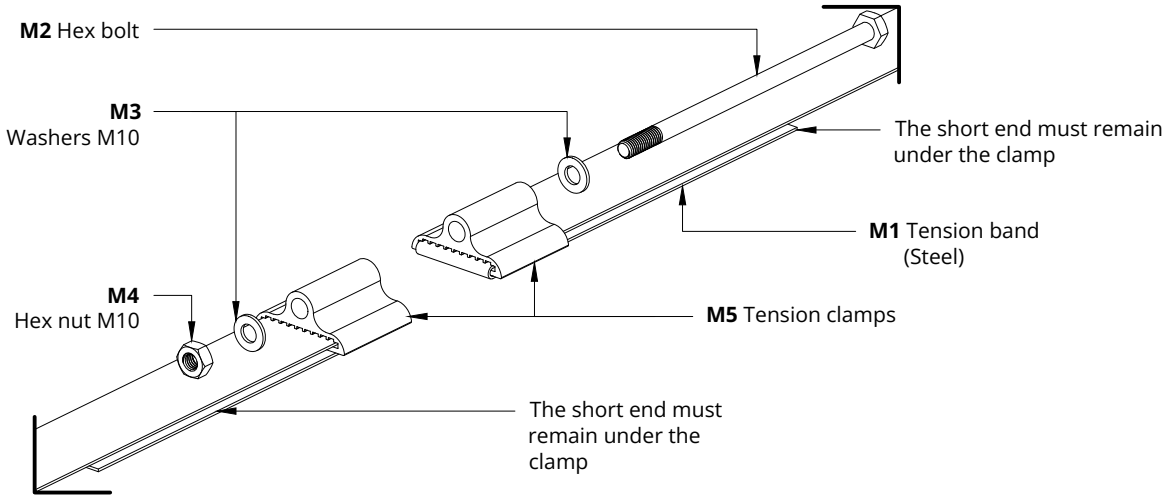


Place the tension bands M1 (Steel band) around the side walls and thread the bands into the eyelet as follows (see sketch above).

Hex nuts and bolts must be tightened as long as the planks are stationary in all directions.

**The tension band and clamps must be placed as shown in the picture below.**

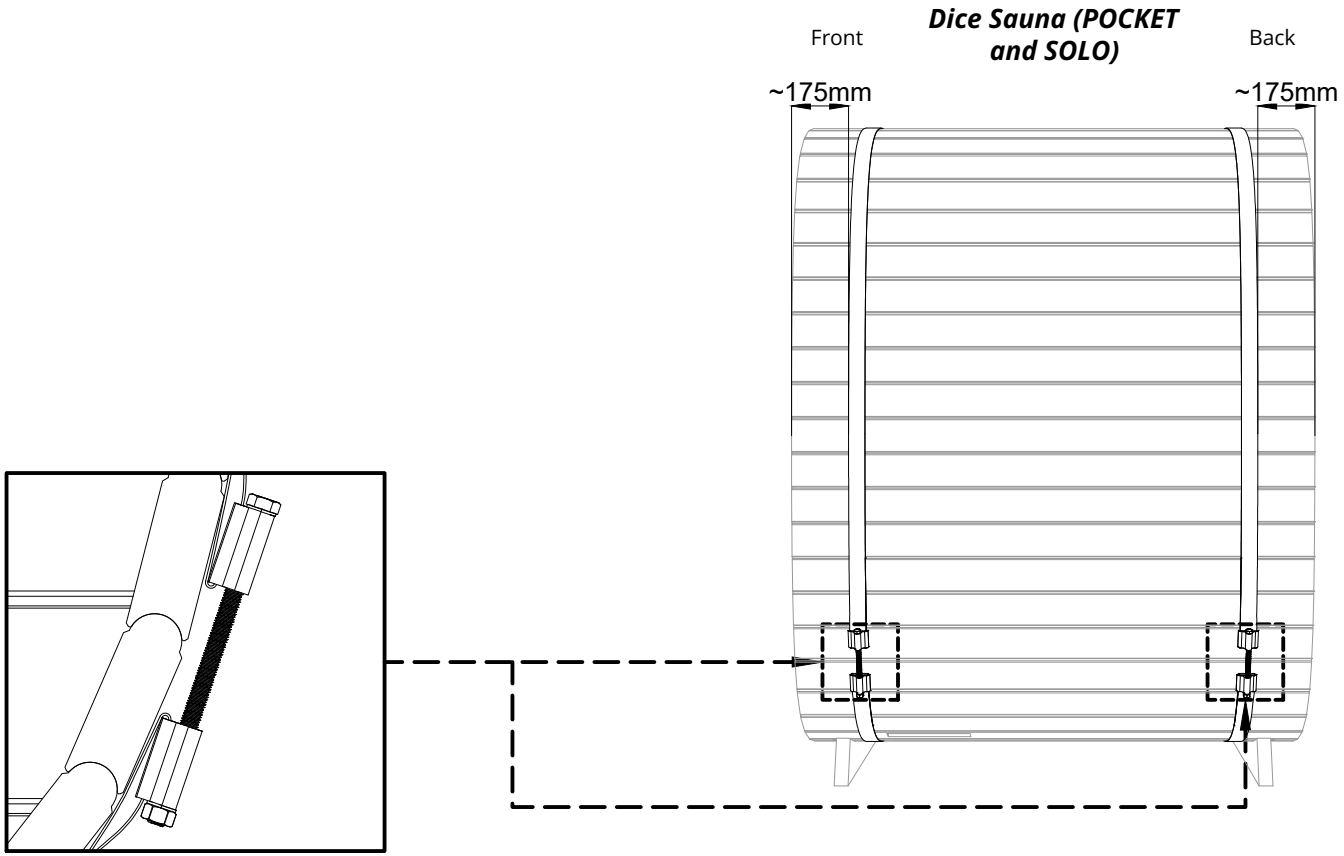

| | | |
|---|---|---|
| S1 | Screws 3x30 | 10<br>*14 |
| R6 | Nail 2,5x25 | |

NB! use a level

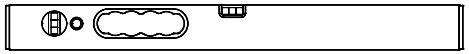

*** For Dice Sauna (SOLO)**

**Remove the connecting strips from the wall!**
**Install the drip edge sheet metal profile on the left and right!**
**Use a heat source when bending the underlay!**
**Fasten the underlay along the edges.**

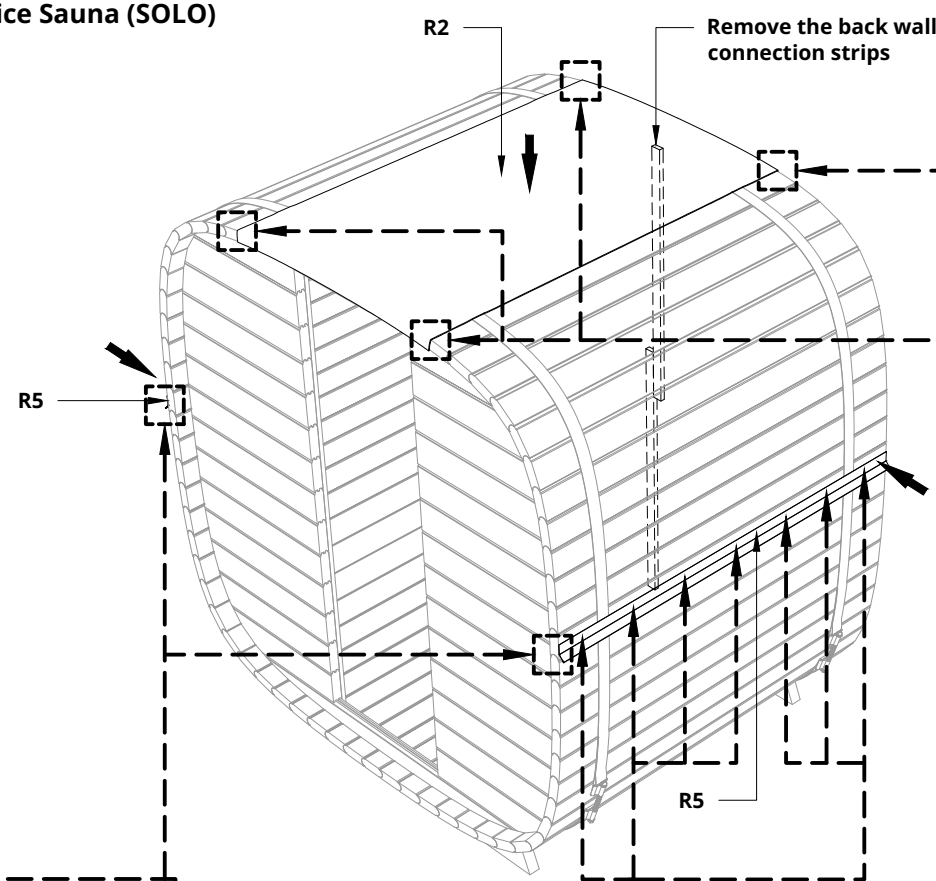


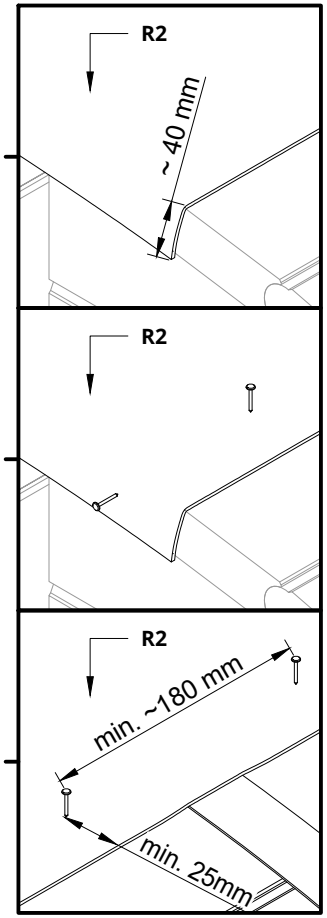


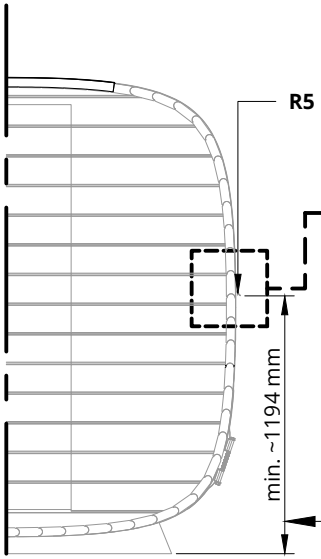


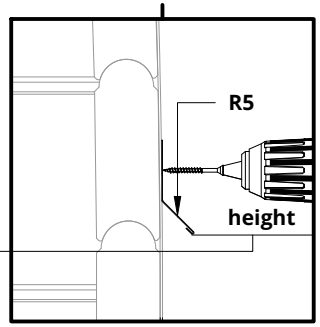


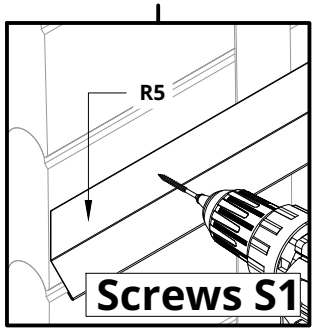

| R6 | Nail 2,5x25 |
|---|---|
|  | |

**Sheets are self-adhesive, for better adhesion use a heat source!**
**The base row starts at the front!**
**Cut sheets that extend over the edge!**
**Suitable leftovers can be used!**
**Repeat these steps on the other side as well!**

**Recommendation proper installation are in separate pages.**

***Dice Sauna (POCKET)***

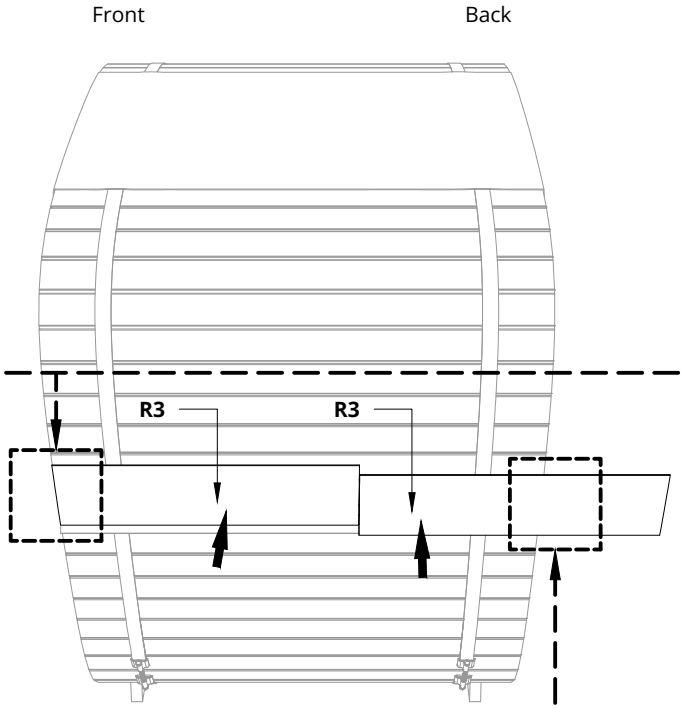


***Dice Sauna (SOLO)***

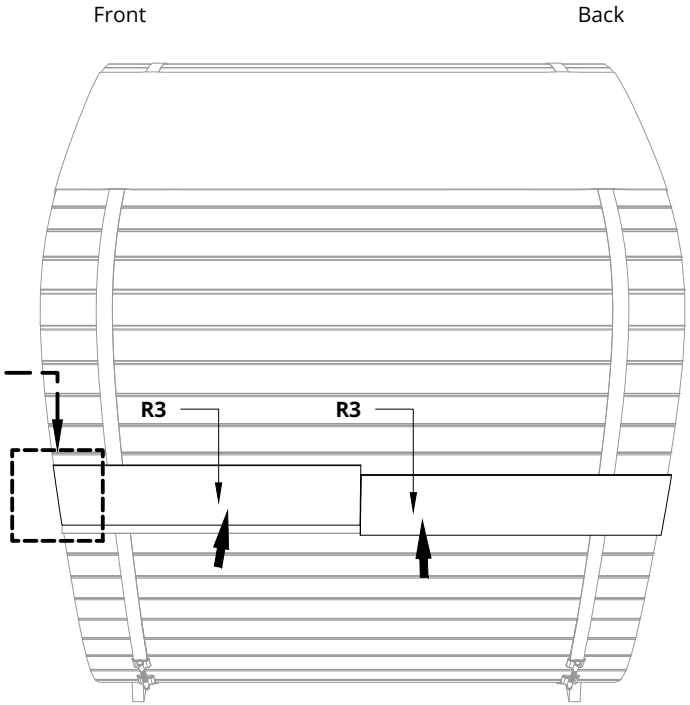


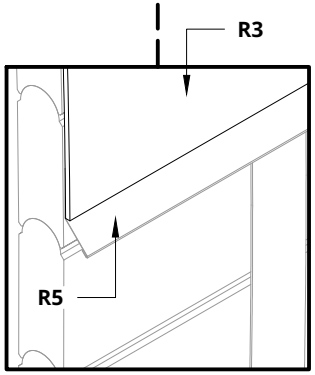


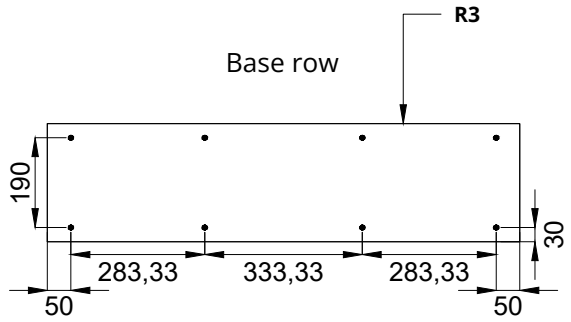


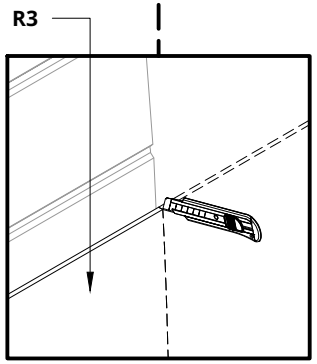

| R6 | Nail 2,5x25 |
|---|---|
|  | |

**Sheets are self-adhesive, for better adhesion use a heat source!**
**The 1.row starts at the front and offset!**
**Cut sheets that extend over the edge!**
**Suitable leftovers can be used !**
**Repeat these steps on the other side as well!**

**Recommendation proper installation are in separate pages.**

***Dice Sauna (POCKET)***

***Dice Sauna (SOLO)***

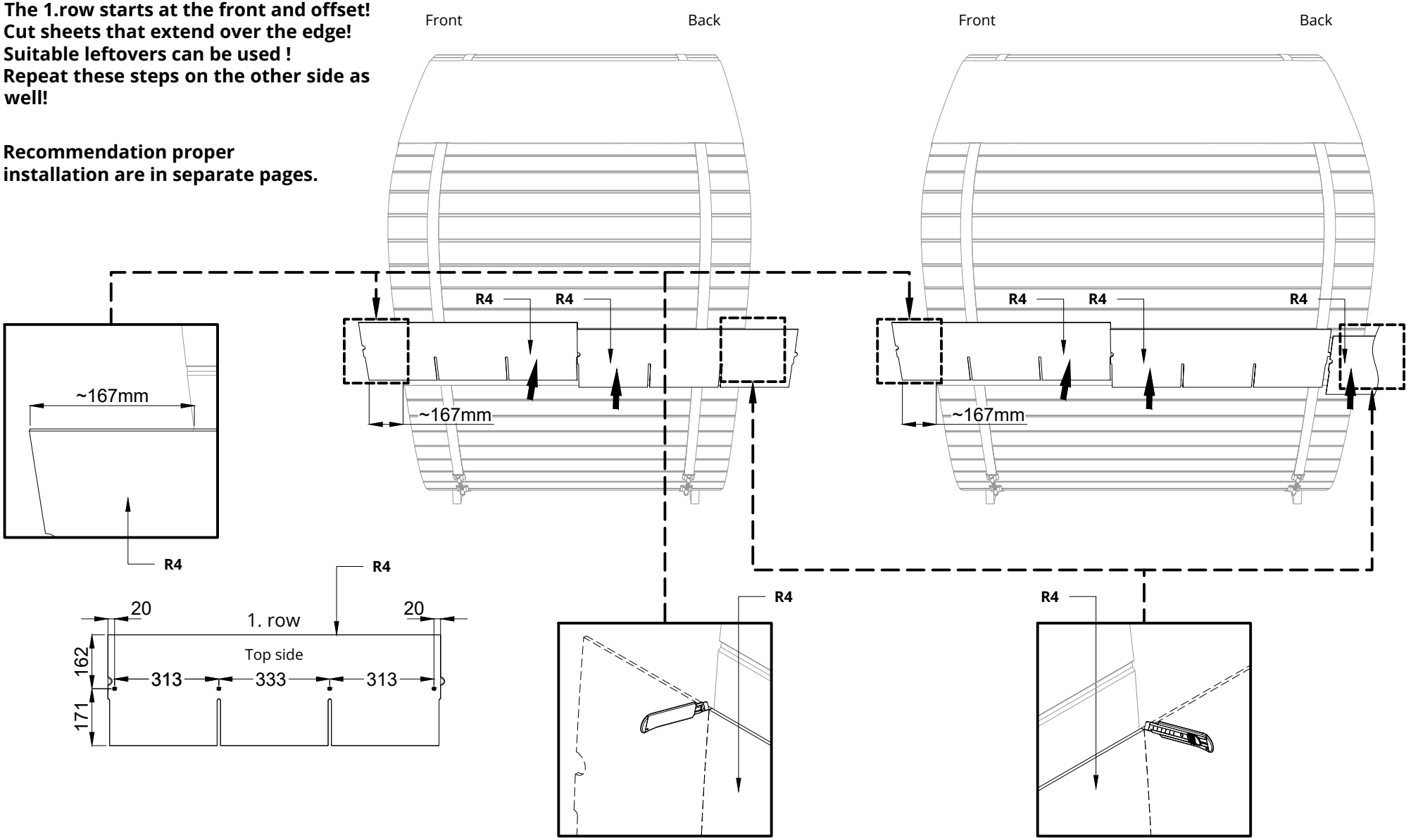

| R6 | Nail 2,5x25 |
|---|---|
|  | |

**Sheets are self-adhesive, for better adhesion use a heat source!**
**The roof ridge can be started from the back end of the sauna or from the front end!**
**Cut sheets that extend over the edge!**

**Recommendation proper installation are in separate pages.**

***Dice Sauna (POCKET)***

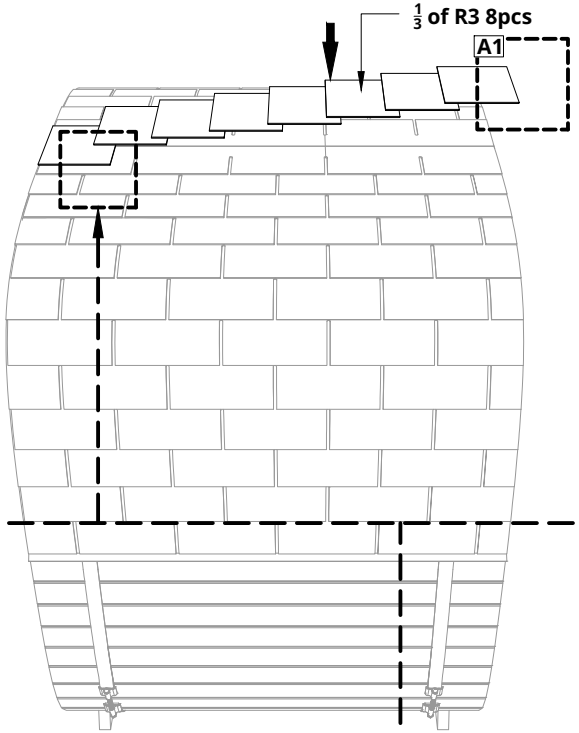


***Dice Sauna (SOLO)***

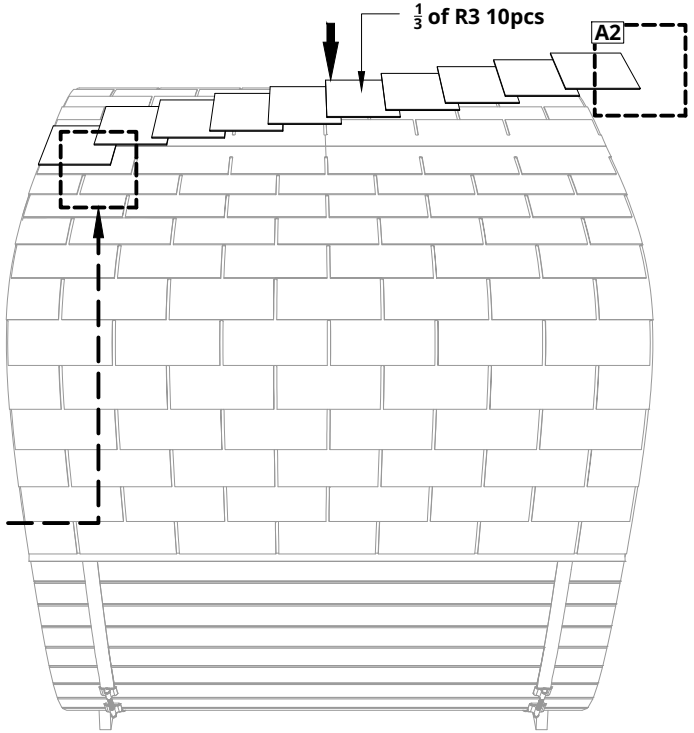


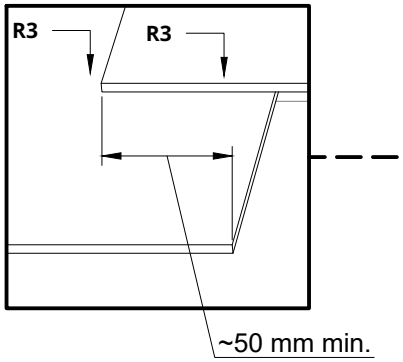


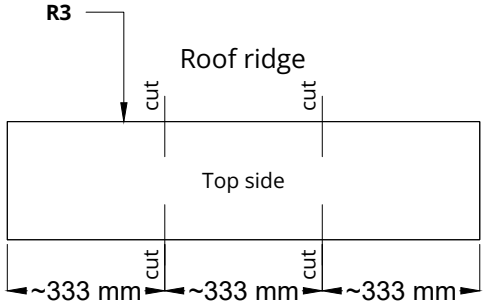


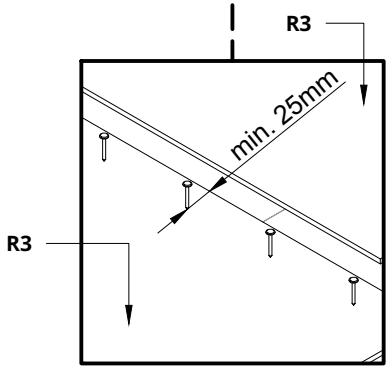


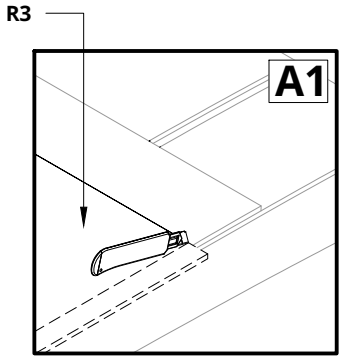


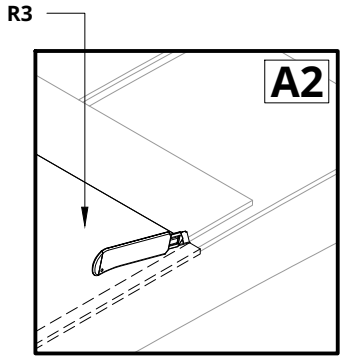

| | | |
|---|---|---|
| S7 | Screws 4,5x80 for Spruce<br>Screws 4,2x75 for Thermo | 48 |
|  | | |

**Please countersink the screw head(s)!**
**Install the cover boards with 3 screws!**
**Add glue for the 2 lower cover boards!**
**Fill the gaps between the bitumen sheets and covering board in front and back!**

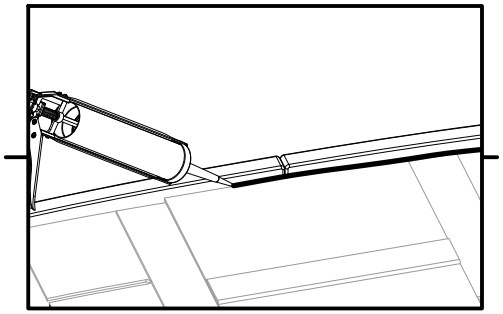

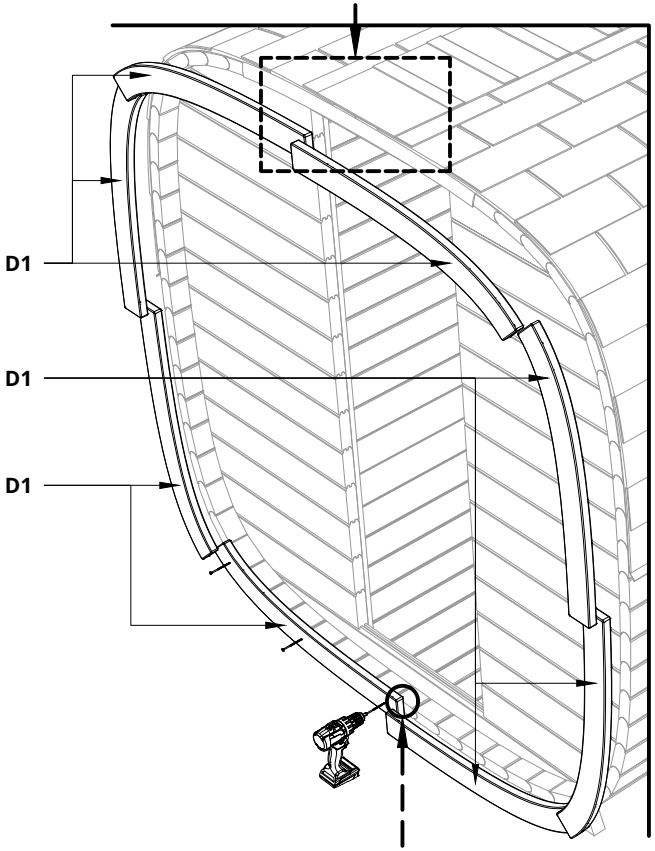


*Frontside of Dice Saunas*

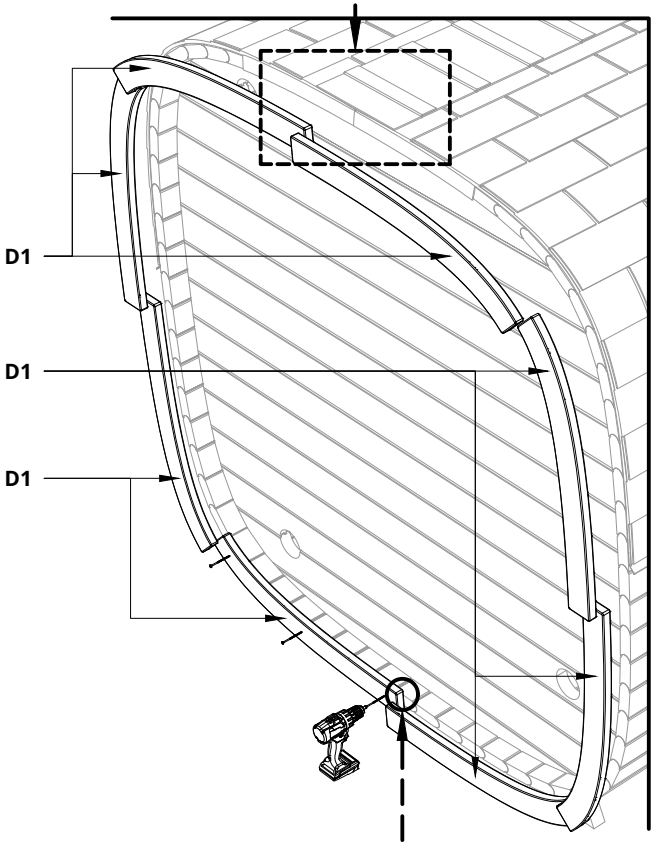


*Backside of Dice Saunas*

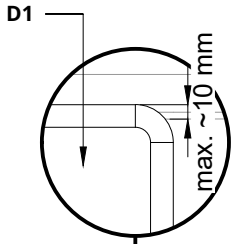

| S1 | Screws 3x30 | 22 |
|---|---|---|
|  | | |

**The inner and outer ventilation grilles V2 and adjustable cover V3 are screwed with 3 screws and V4 are screwed with 4 screws.**

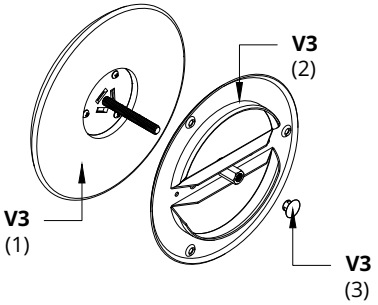


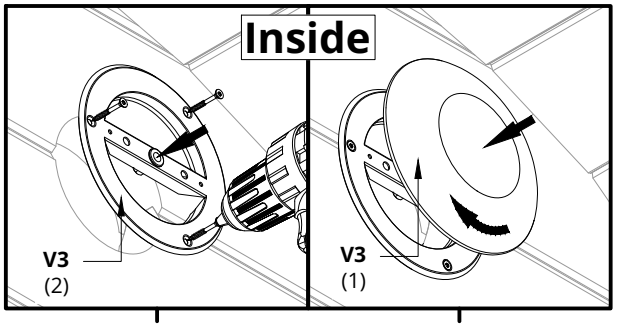


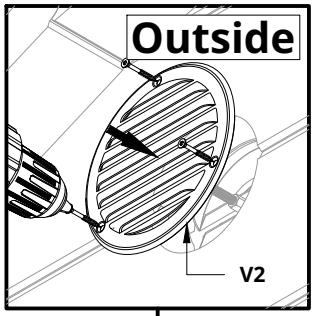


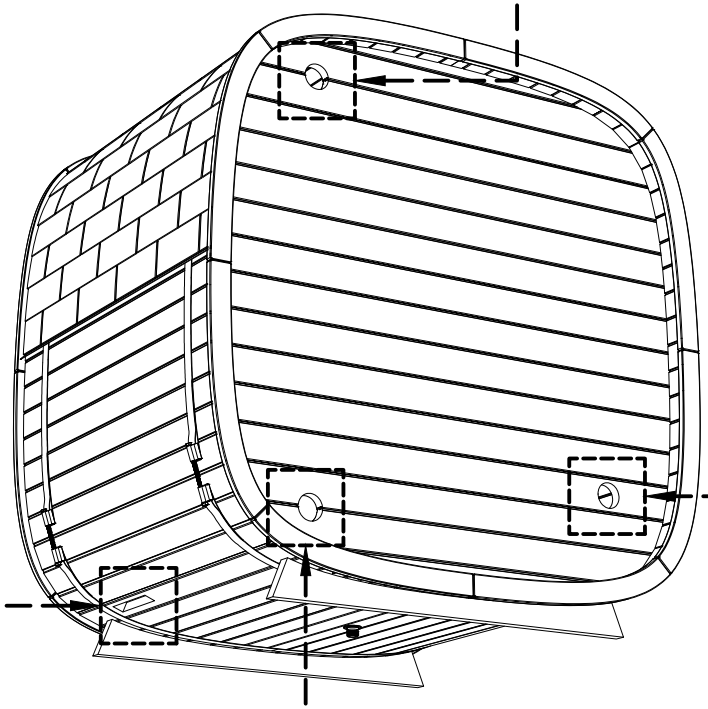

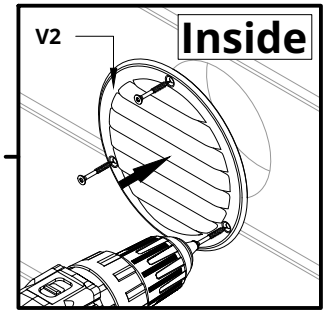


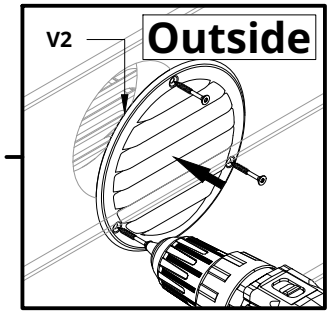


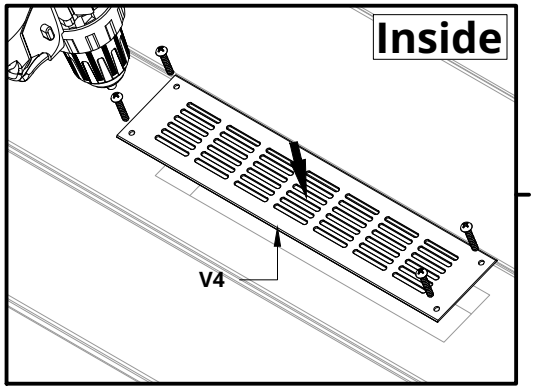


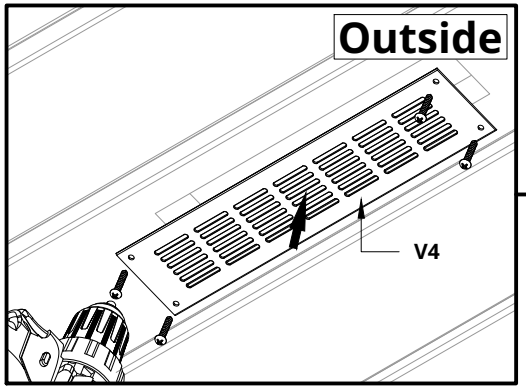


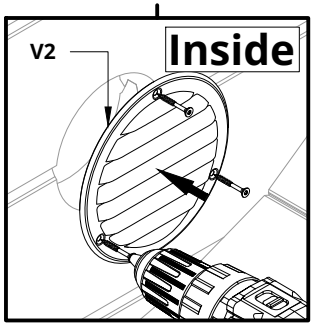


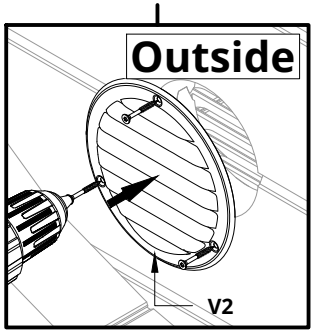

| S7 | Screws 4,5x80 for Spruce<br>Screws 4,2x75 for Thermo | 18 |
|---|---|---|



NB! use a level

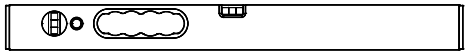

**Please countersink the screw head(s)!**
**Only for the wooden front wall!**
**Measure and mark the window(s) locations if they are unmarked or vanished!**
**Drill holes in the corners of the marked area!**
**Cut the holes!**
**Fasten the pieces of boards together!**
**Remove the connecting strips from the wall!**

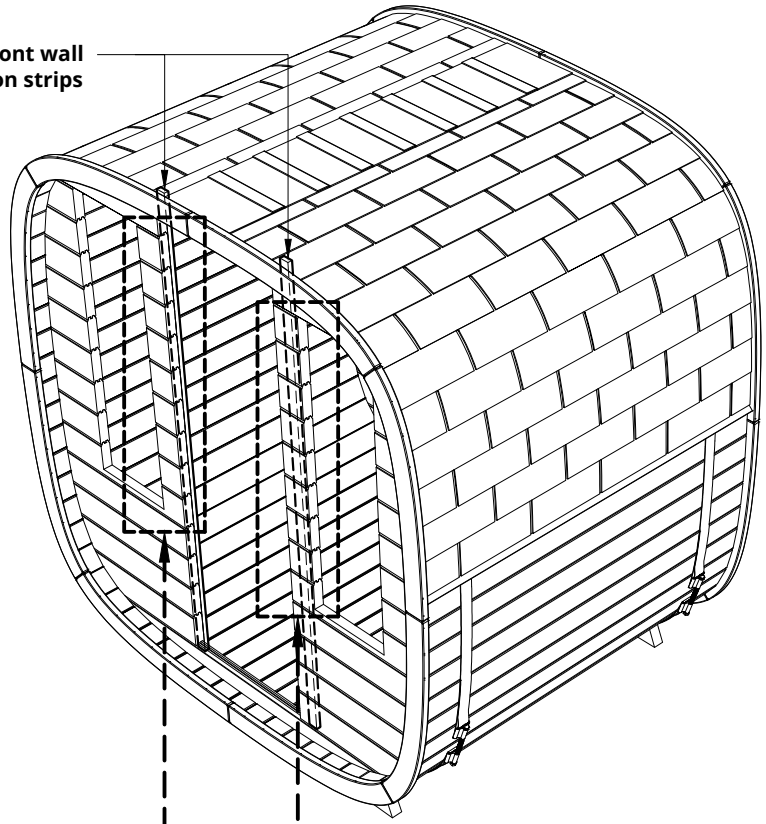


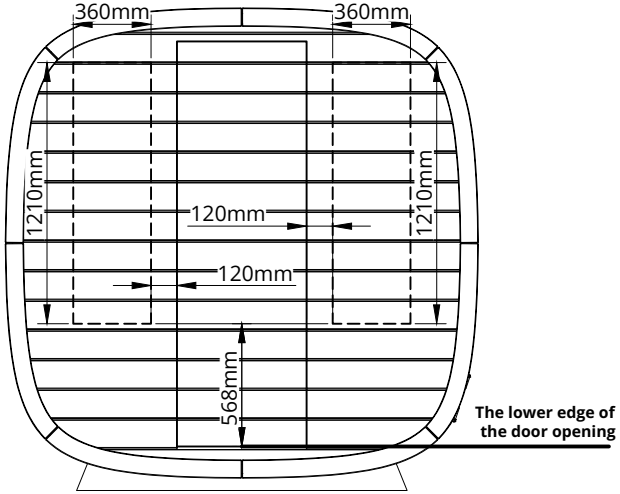


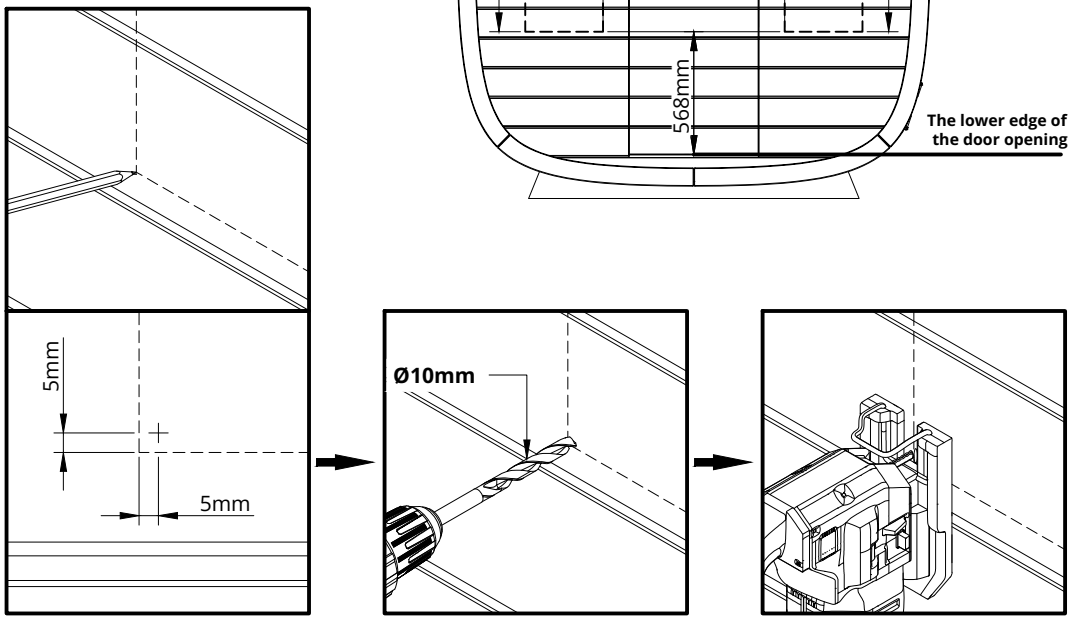


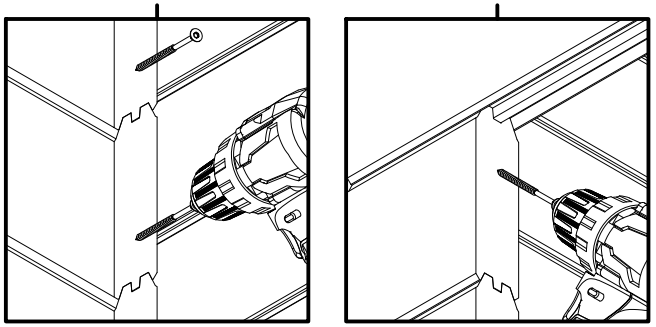

| | | |
|---|---|---|
| S6 | Screws 4,2x75 | 26 |
| S4 | Screws 4,2x50 | 28 |
| S2 | Screws 3x40 | 38 |
|  | | |

NB! use a level

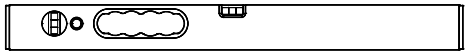

**Please countersink the screw head(s)!**
**Door and windows installation for the wooden wall!**
**Install the door from the inside, fasten with screws and install door moldings!**
**Install the windows from the outside, fasten with screws and install window moldings!**

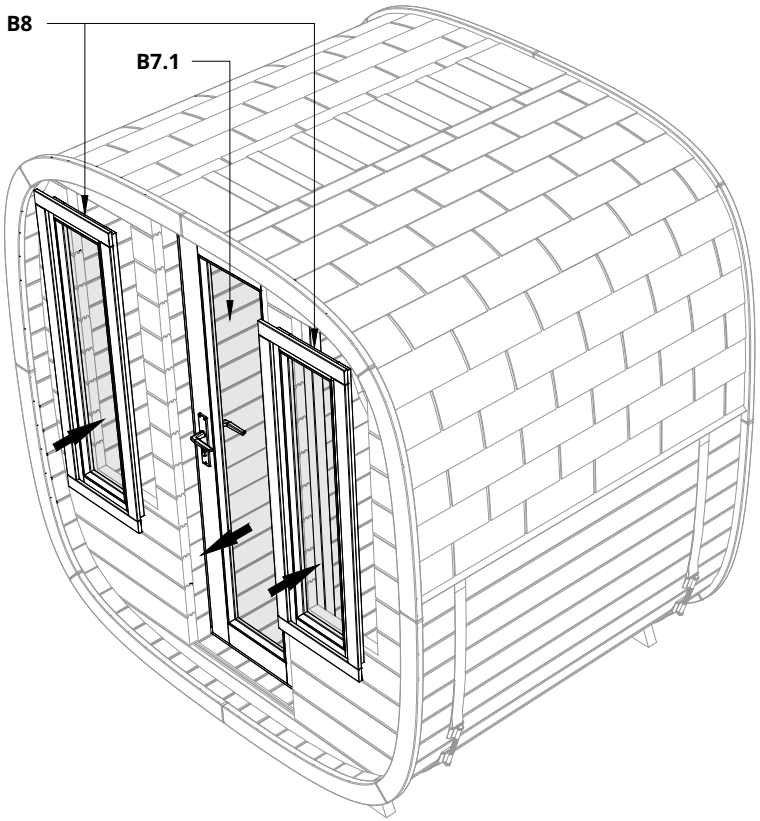


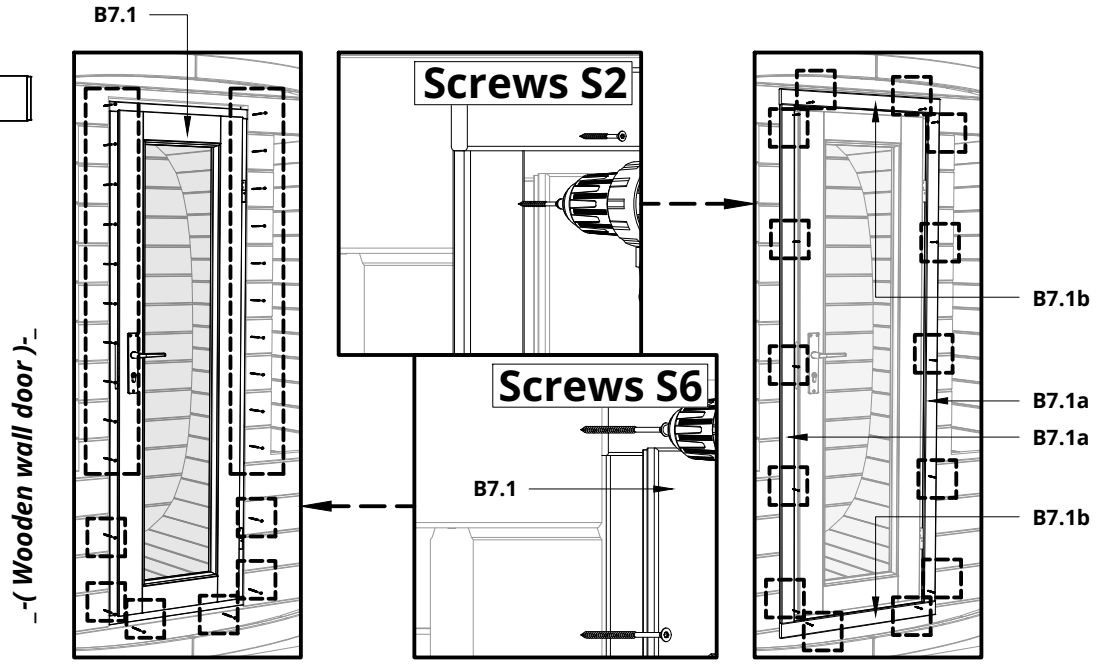


**2x** **left and right**

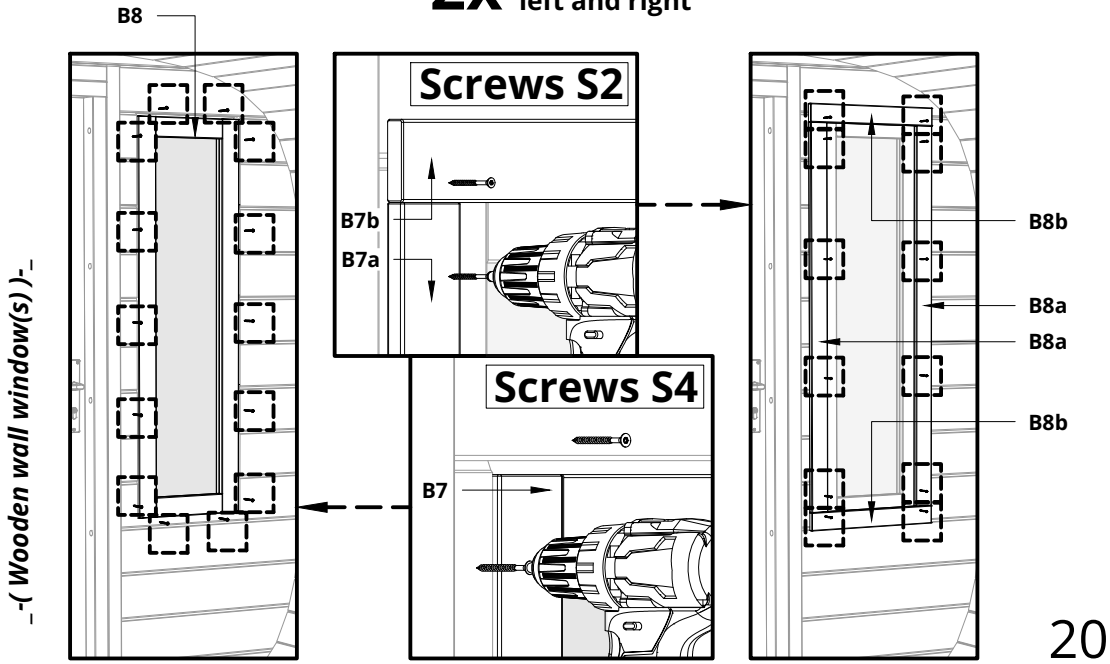

| | | |
|---|---|---|
| S6 | Screws 4,2x75 | 14 |
| S3 | Screws 4,5x50 | 14 |
|  | | |

NB! use a level

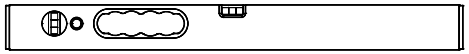

**Please countersink the screw head(s)!**
**Door installation for the glass wall!**
**Remove door molding from the glass wall!**
**Install the door from the inside, fasten with screws and install door moldings!**

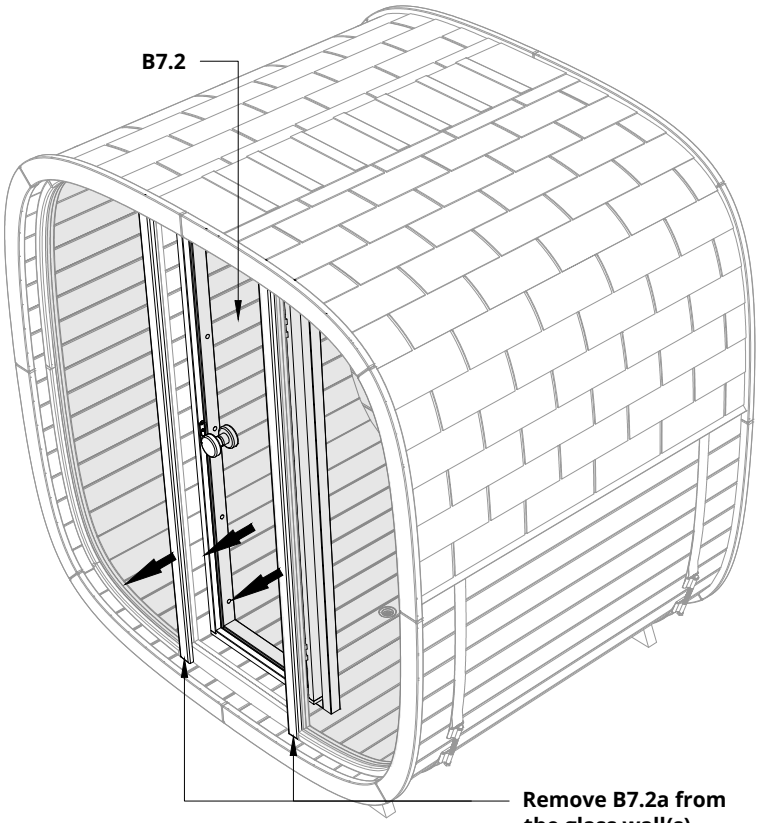


*-( Remove B7a(s) from glass wall(s) )-*

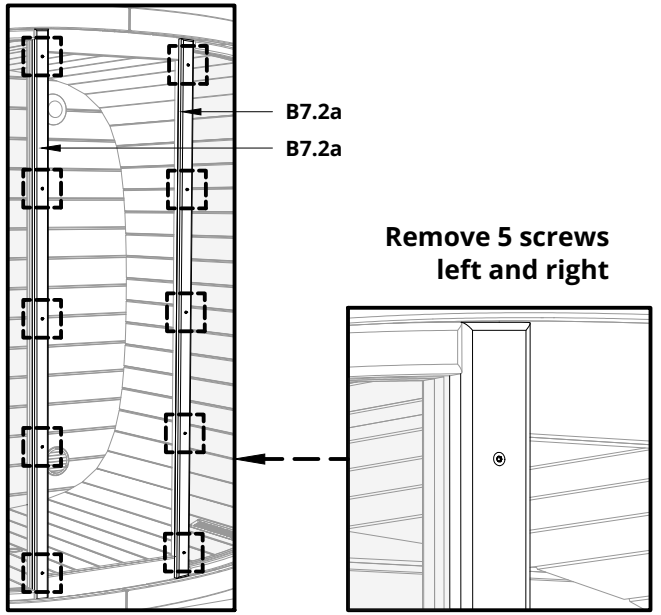


*-( Glass wall door )-*

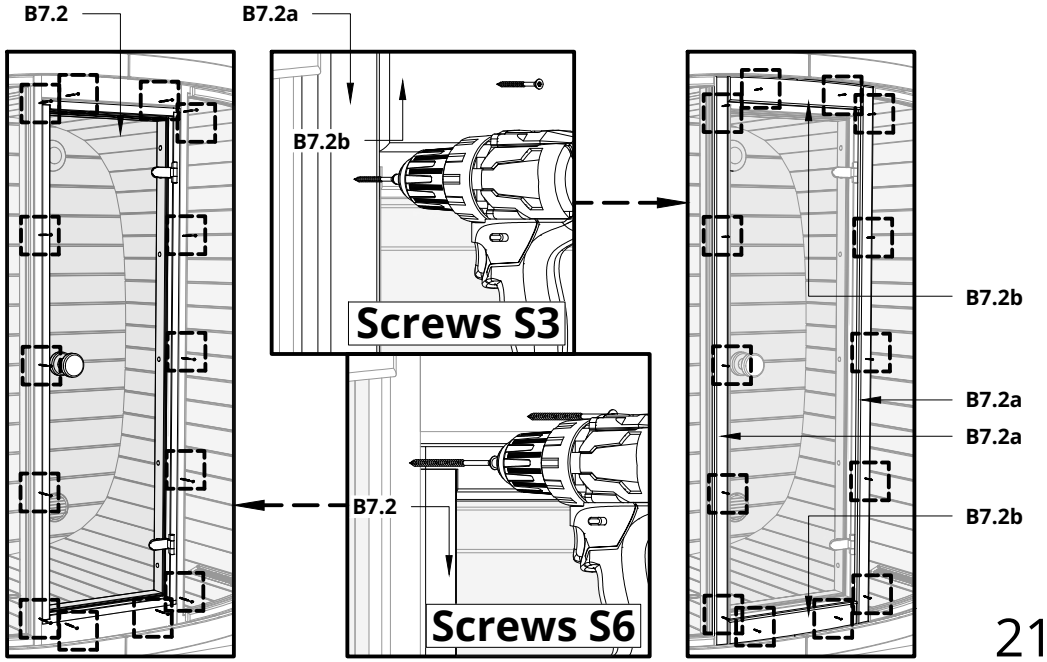

# Dice Sauna

## Bench assembly guide

Dice Sauna (POCKET and SOLO)
Compatible with both glass wall and wood wall construction options.

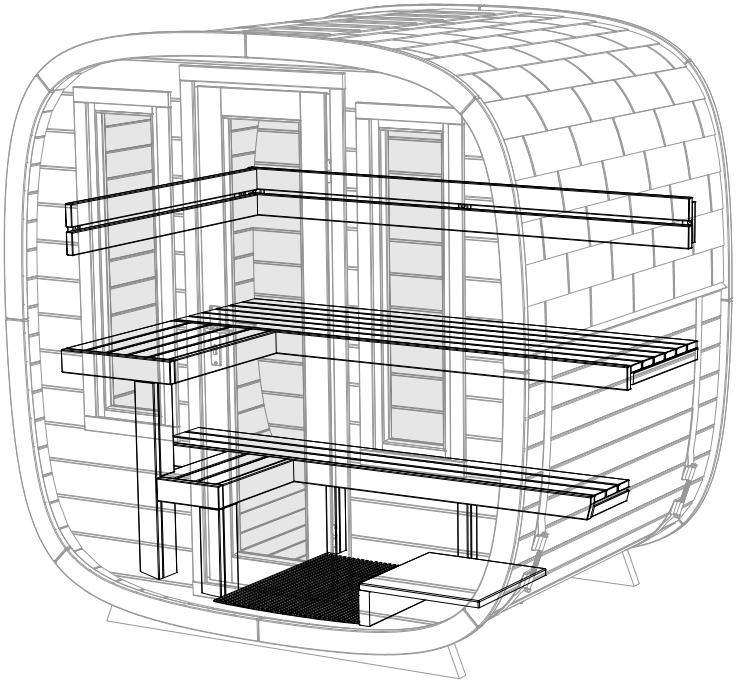

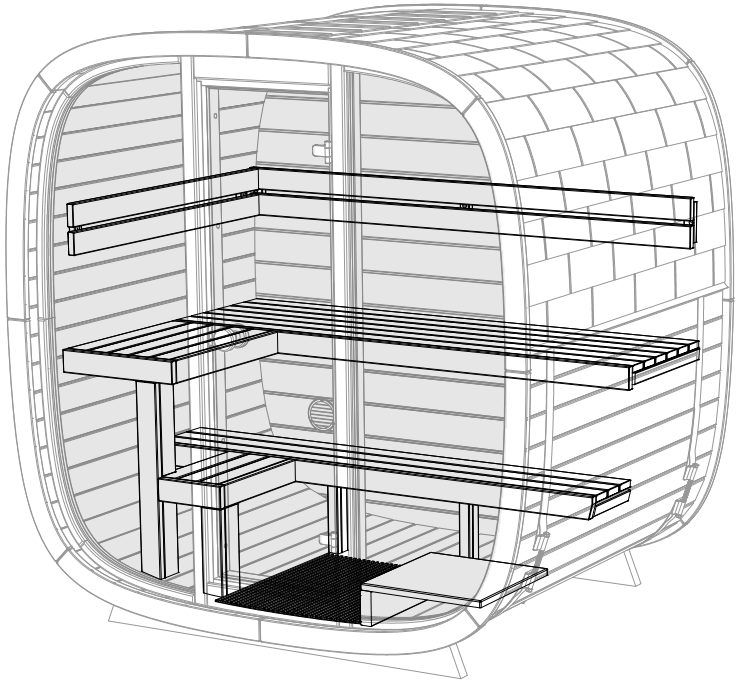

*Check the parts for completeness before assembly!*

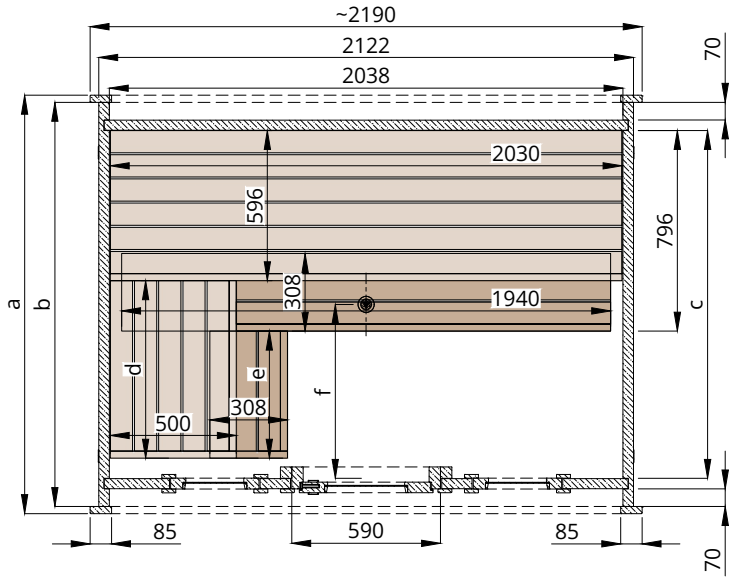


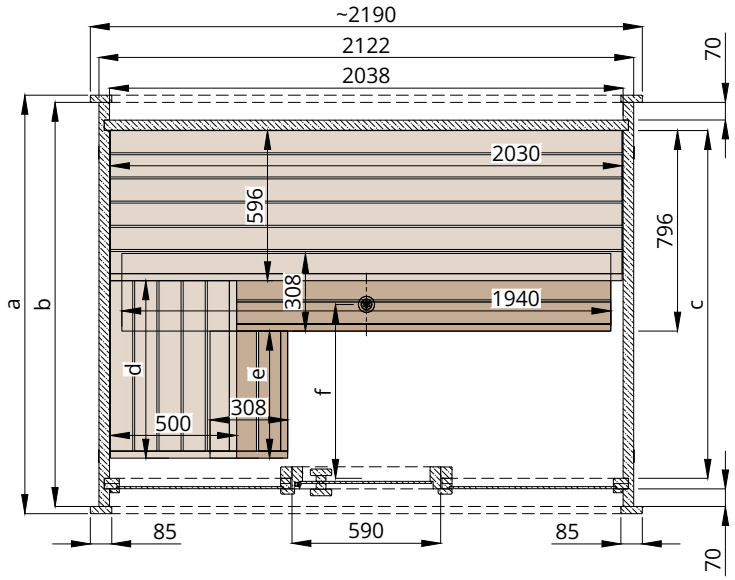


# Scale 1 : 30

| | Dice Sauna | |
|---|---|---|
| | (POCKET) | (SOLO) |
| a | ~1660 mm | ~2060 mm |
| b | ~1604 mm | ~2004 mm |
| c | ~1380 mm | ~1780 mm |
| d | ~704 mm | ~1104 mm |
| e | ~504 mm | ~904 mm |
| f | ~690 mm | ~890 mm |

section (steam room)

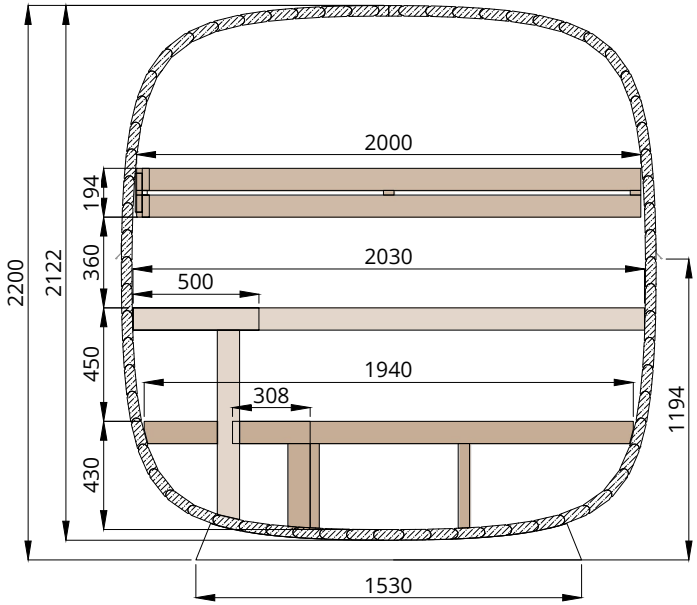


# Dice Sauna

Bench assembly

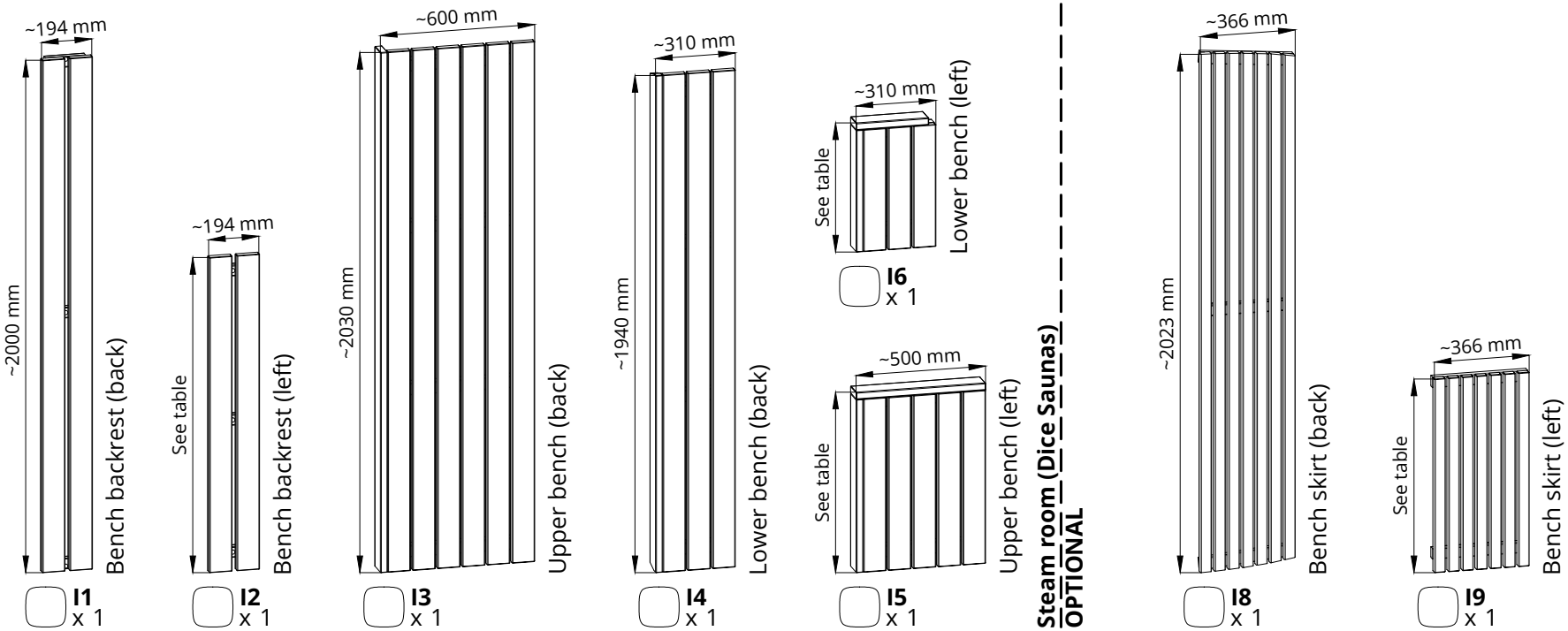


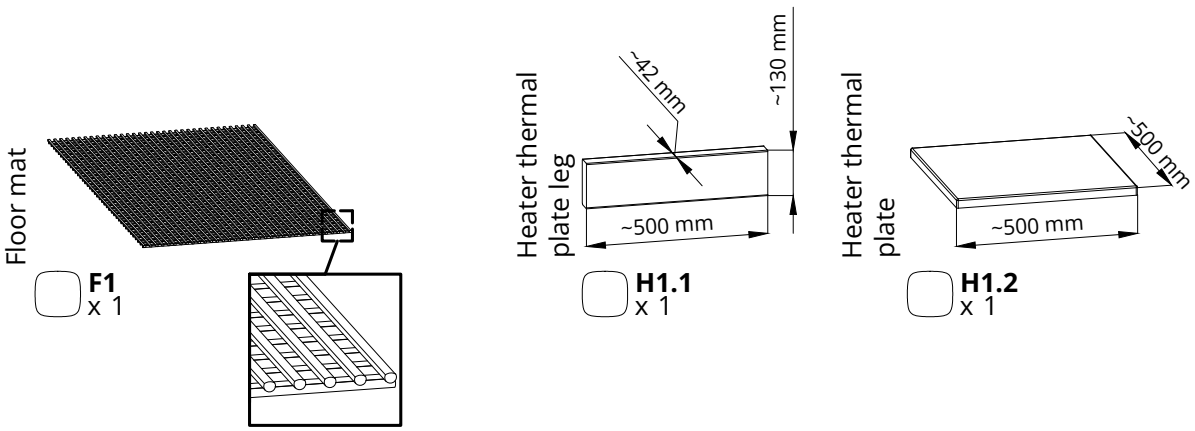


# Detail list 1

Bench assembly

| Dice Sauna | I2 | I5 | I6 | I9 |
|---|---|---|---|---|
| (POCKET) | ~1230 mm | ~704 mm | ~504 mm | ~756mm |
| (SOLO) | ~1630 mm | ~1104 mm | ~904 mm | ~1156mm |

| Dice Sauna | | POCKET | SOLO |
|---|---|---|---|
| Name in manual | **K Square woods 45x45mm** | | |
| K90 | 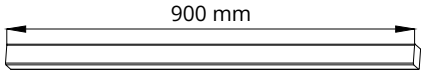  | 1 | |
| K55 | 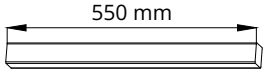  | 2 | |
| K45 | 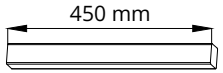  | 4 | |
| K36* | 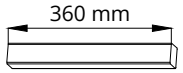  * | 3 | |
| K30 | 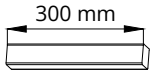  | 1 | |
| K28 | 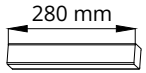  | 3 | |
| K10 | 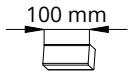  | 2 | 3 |

*** (Optional) for Bench skirts**

| Dice Sauna | | POCKET | SOLO |
|---|---|---|---|
| Name in manual | **Legs and Cover board** | | |
| D2 | 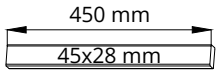  | 2 | |
| D3 | 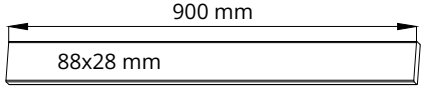  | 1 | |
| D4 | 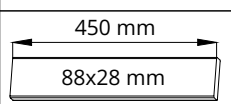  | 4 | |
| Name in manual | **Screws (Scale 1:2)/ Screw size** | **Qty.** | |
| S7 |  Screws 4,5x80 for Spruce<br> Screws 4,2x75 for Thermo | 40 | |
| S5 |  Screws 4,5x60 for Spruce<br> Screws 4,2x55 for Thermo | 50 | |
| S2 | 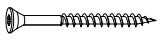 Screws 3x40 | 5 | |

# Detail list 2

Bench assembly

| | | |
|---|---|---|
| S2 | Screws 3x40 | 3 |
| S5 | Screws 4,5x60 for Spruce<br>Screws 4,2x55 for Thermo | 6 |
| S7 | Screws 4,5x80 for Spruce<br>Screws 4,2x75 for Thermo | 10 |



1 . **Remove the pocket hole cup**
2. **Screw the bench backrest**
3 . **Put the pocket hole cup back**

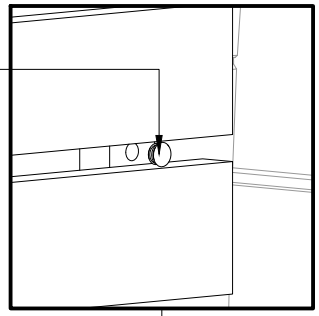

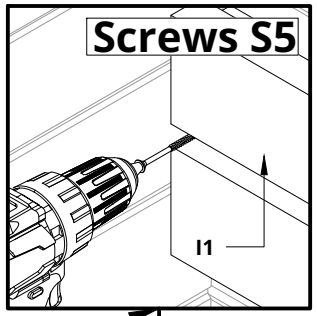


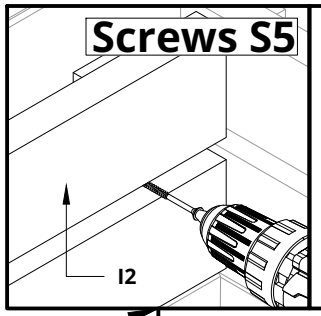


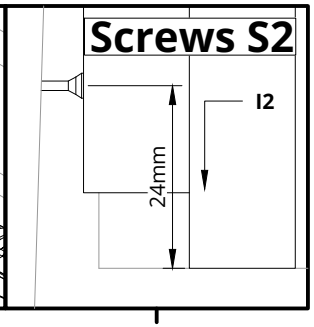


NB! use a level

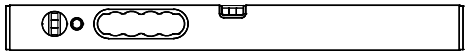

**Please countersink the screw head(s)!**
**Height measurements are measured from a straight surface from center!**
**Install the bench backrests!**
**Install square woods for benches!**
**Use glue between the square wood wall!**

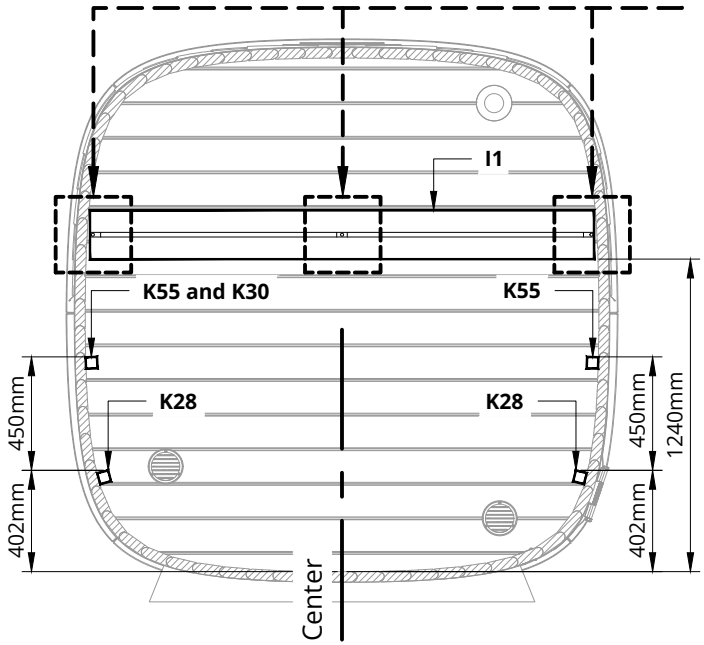


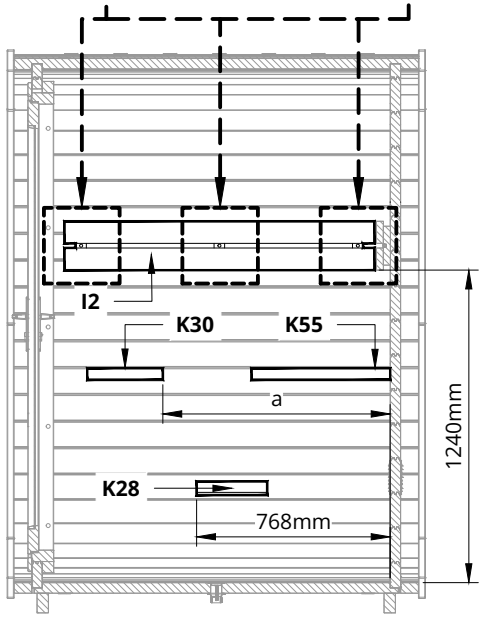


| Dice Sauna | a |
|---|---|
| (POCKET) | ~902 mm |
| (SOLO) | ~1302 mm |

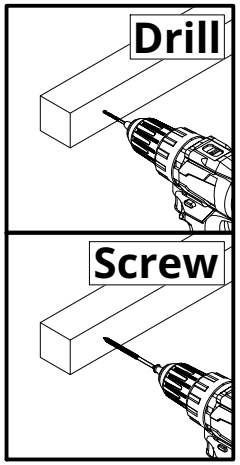


**Notice!**
Drill 4mm hole in the K.. square woods before screwing.

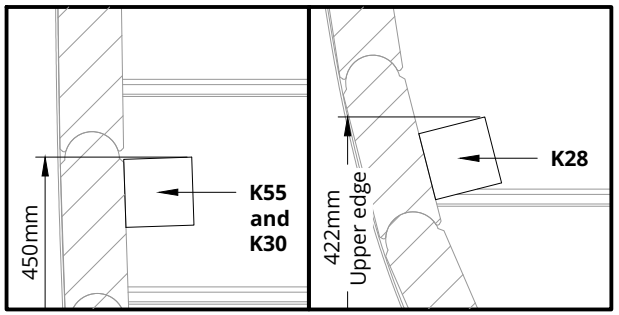


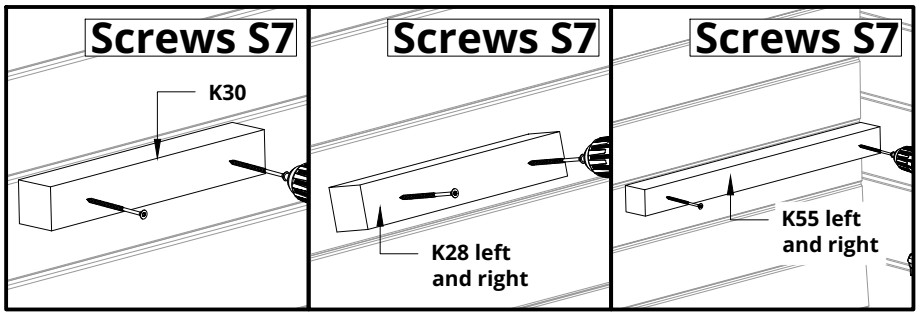

| | | |
|---|---|---|
| S5 | Screws 4,5x60 for Spruce<br>Screws 4,2x55 for Thermo | 8 |
| S7 | Screws 4,5x80 for Spruce<br>Screws 4,2x75 for Thermo | 12 |
|  | | |

NB! use a level

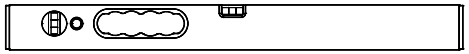

**Please countersink the screw head(s)!**
**Install the benches I3 and I4!**
**Install square woods for benches!**
**Use glue between the square wood and the wall (only K10 square wood)!**
**The square wood K45 and cover board D2 are longer, they must be cut to the correct size!**

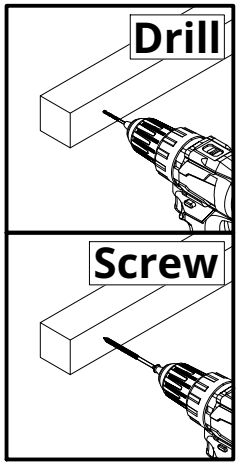


**Notice!**
Drill 4mm hole in the K.. square woods before screwing.

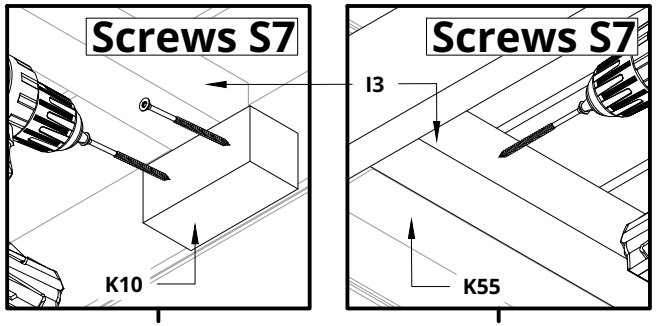


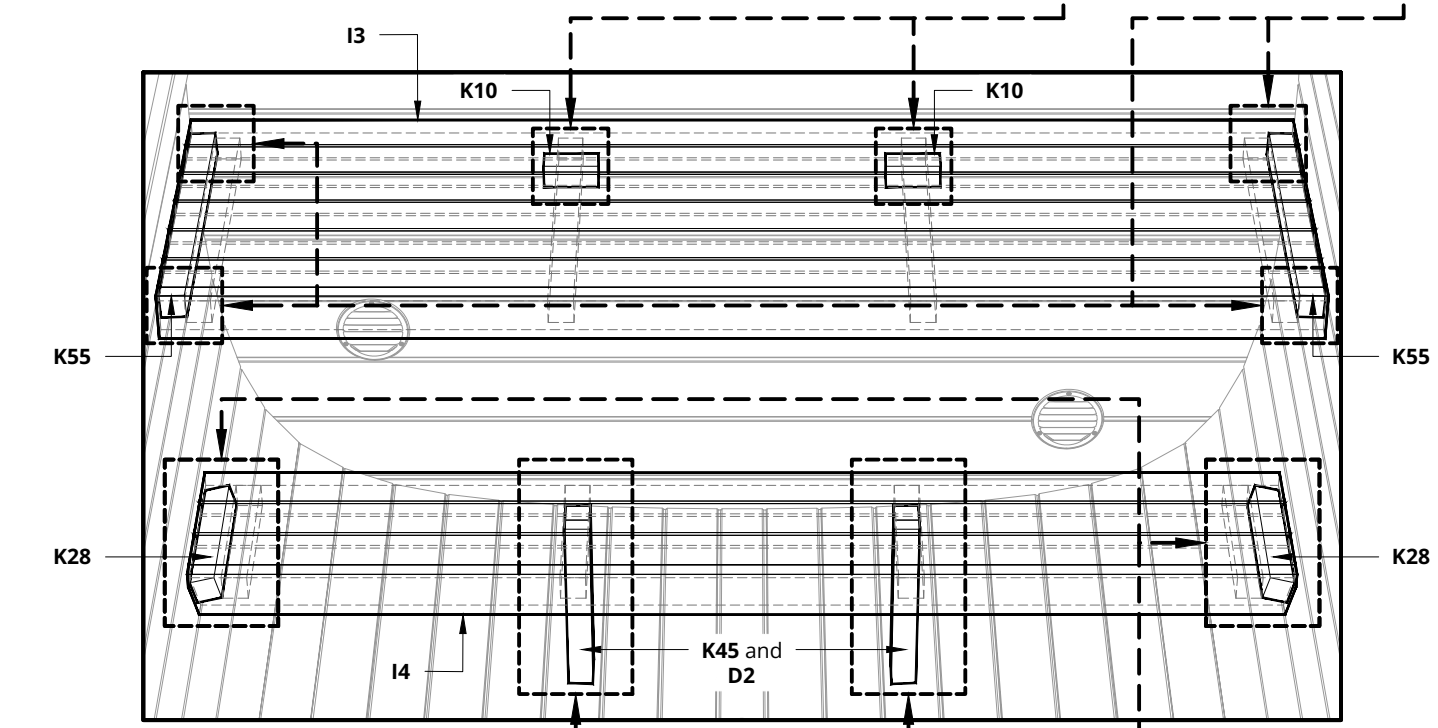


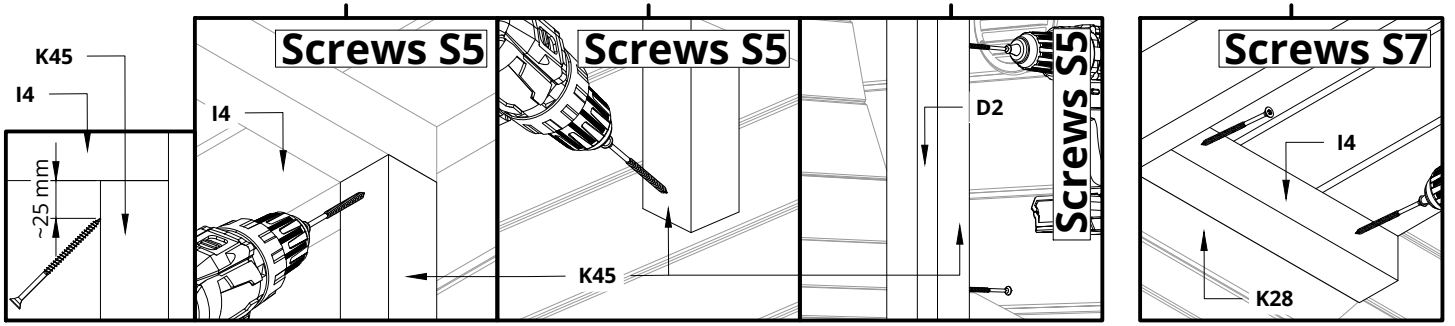

| | | |
|---|---|---|
| S5 | Screws 4,5x60 for Spruce<br>Screws 4,2x55 for Thermo | 6 |
| S7 | Screws 4,5x80 for Spruce<br>Screws 4,2x75 for Thermo | 2<br>*4 |
|  | | |

NB! use a level

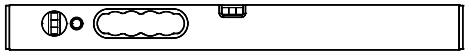

*** For Dice Sauna (SOLO)**

**Please countersink the screw head!**
**Height measurements are measured from a straight surface from center!**
**Install square woods for benches!**
**Use glue between the square wood other pieces!**
**Install the benches I5!**
**Install some aids to keep the bench level!**

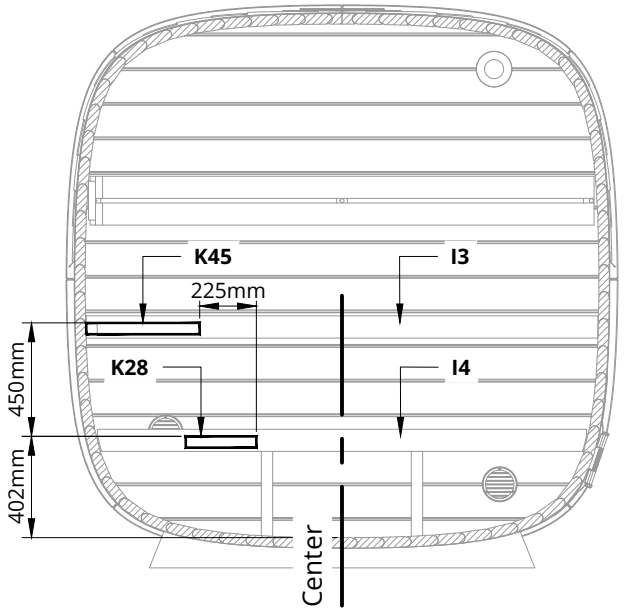


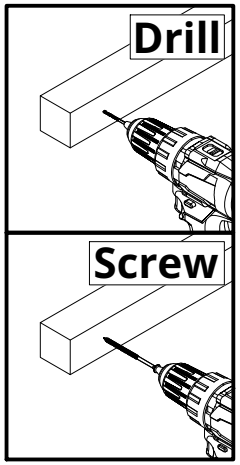


**Notice!**
Drill 4mm hole in the K.. square woods before screwing.

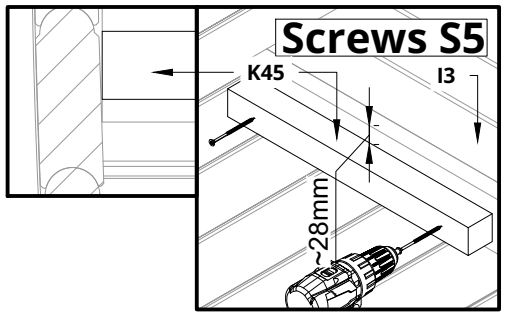


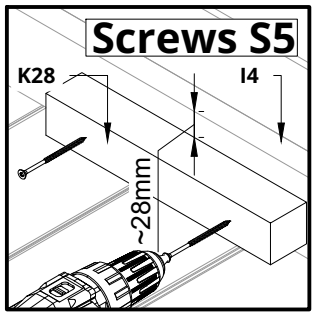


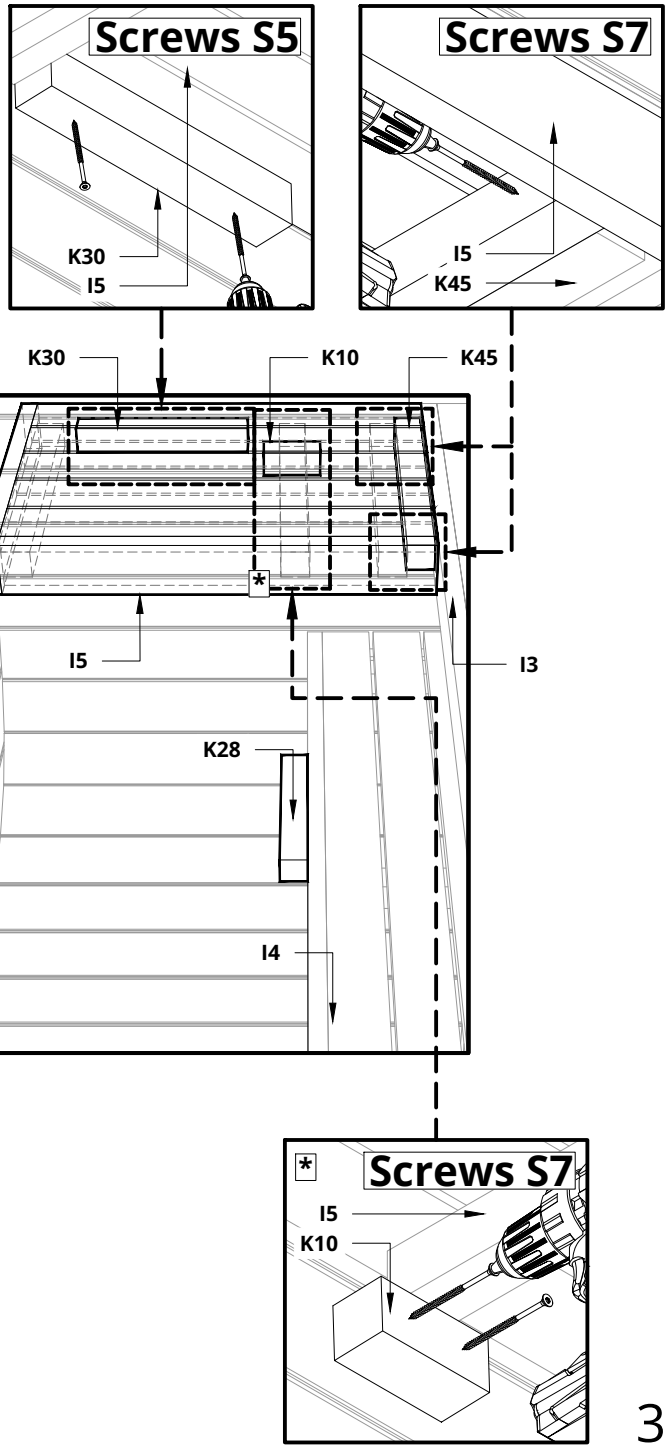

| S5 | Screws 4,5x60 for Spruce<br>Screws 4,2x55 for Thermo | 6 |
|---|---|---|



NB! use a level

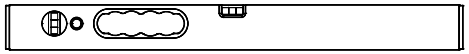

**Please countersink the screw head(s)!**
**Install the bench leg and leg cover boards!**
**The square wood K90 and cover board D3 are longer, they must be cut to the correct size!**

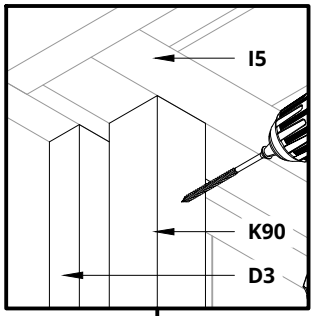


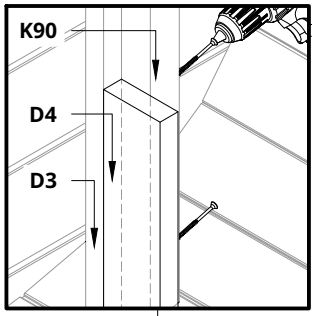


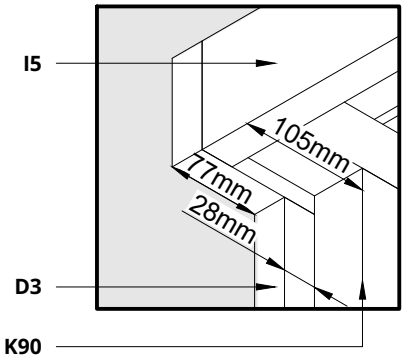


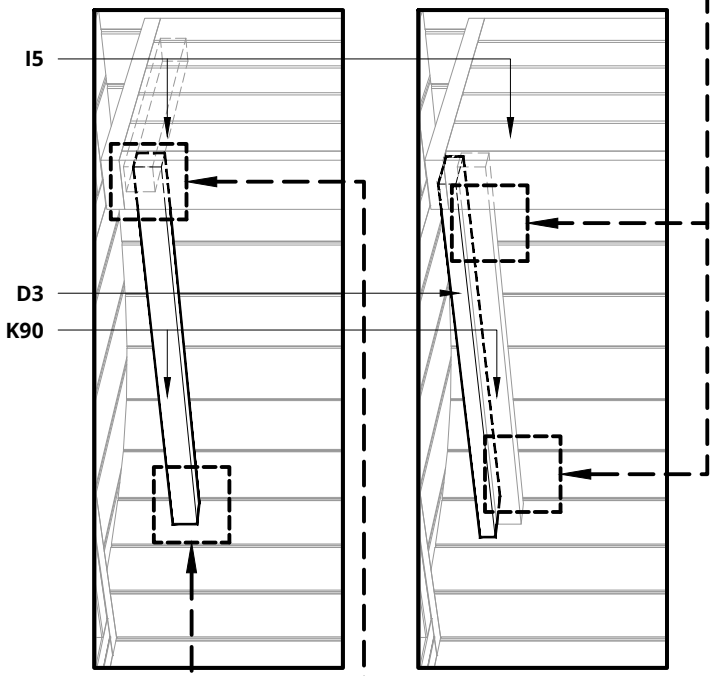


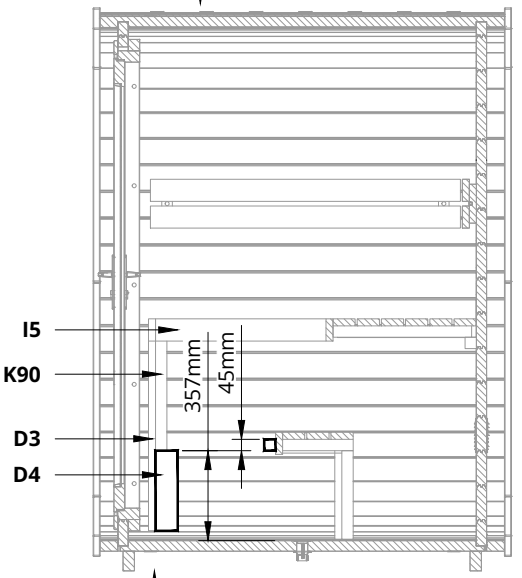


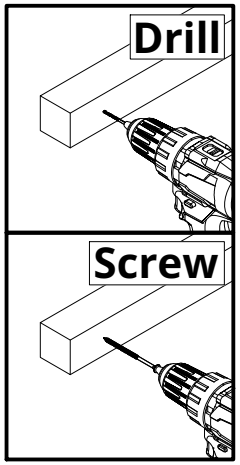


**Notice!**
Drill 4mm hole in the K.. square woods before screwing.

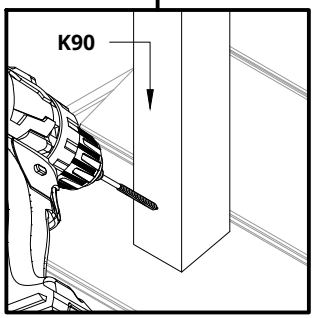


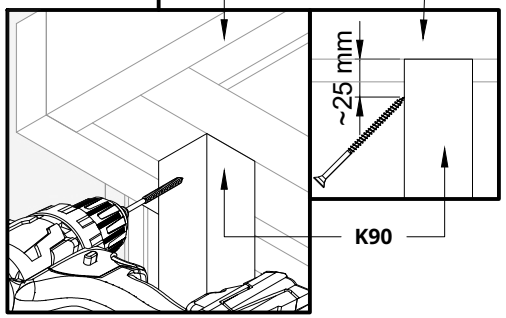


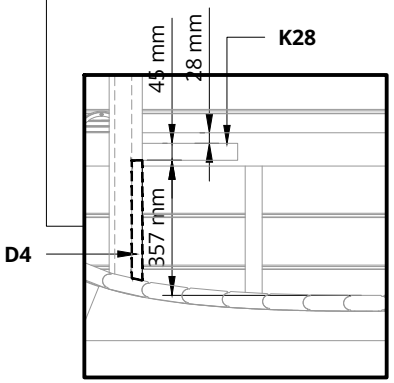

| | | |
|---|---|---|
| S5 | Screws 4,5x60 for Spruce<br>Screws 4,2x55 for Thermo | 8 |
| S7 | Screws 4,5x80 for Spruce<br>Screws 4,2x75 for Thermo | 3 |



NB! use a level

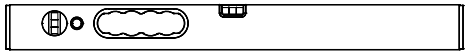

**Please countersink the screw head(s)!**
**Install the bench I6!**
**Install the bench leg and leg cover boards!**
**The square wood K45 and cover boards D4 are longer, they must be cut to the correct size!**

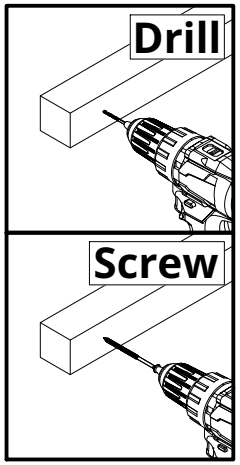


**Notice!**
Drill 4mm hole in the K.. square woods before screwing.

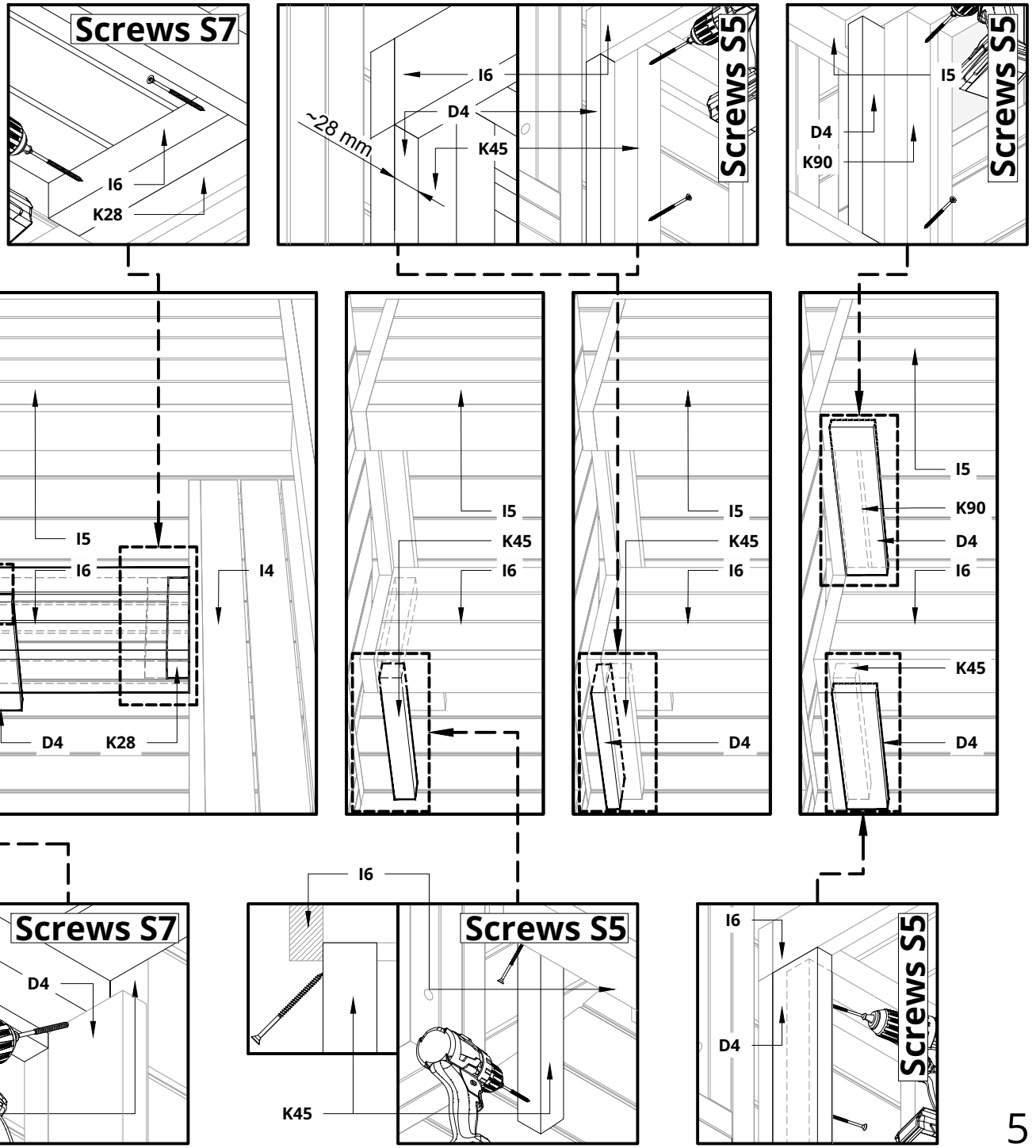

| | | |
|---|---|---|
| S5 | Screws 4,5x60 for Spruce<br>Screws 4,2x55 for Thermo | 3 |
| S7 | Screws 4,5x80 for Spruce<br>Screws 4,2x75 for Thermo | 3 |
|  | | |

NB! use a level

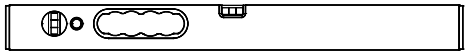

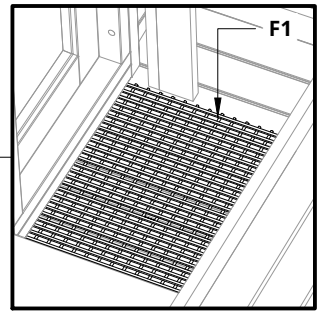


**Please countersink the screw head(s)!**
**Install the leg H1.1 of the thermal protection plate!**
**Drill 5 mm holes in the thermal protection plate H1.2 and install it!**
(Hole location are shown in picture.)

**Place the floor mat F1!**

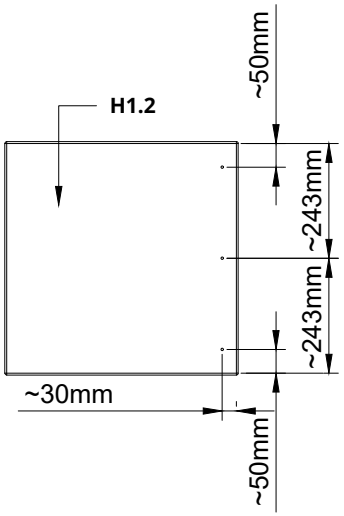


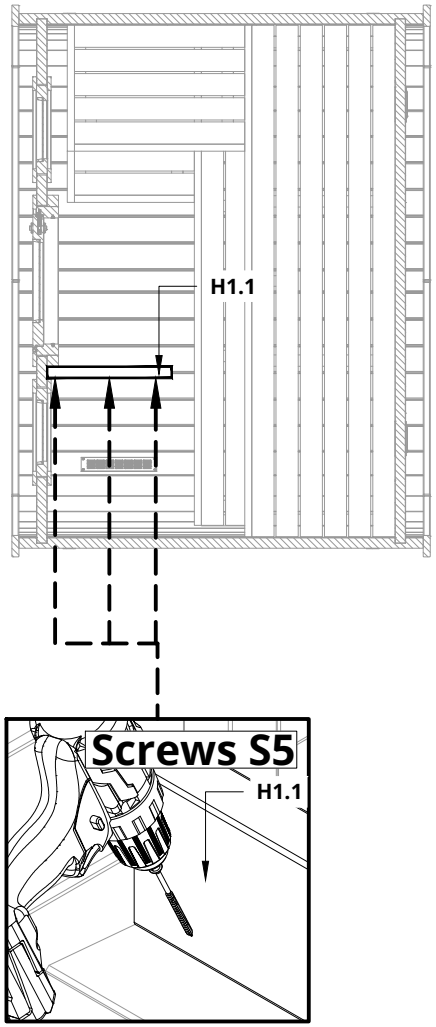


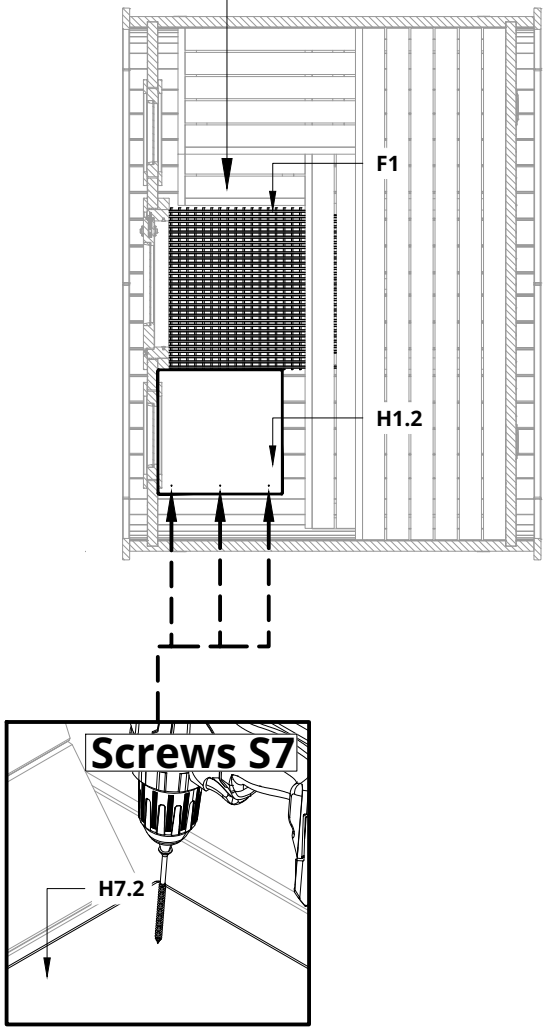

# Dice Sauna

## Addition to the benches in the steam room

Dice Sauna (POCKET and SOLO)
Compatible with both glass wall and wood wall construction options.

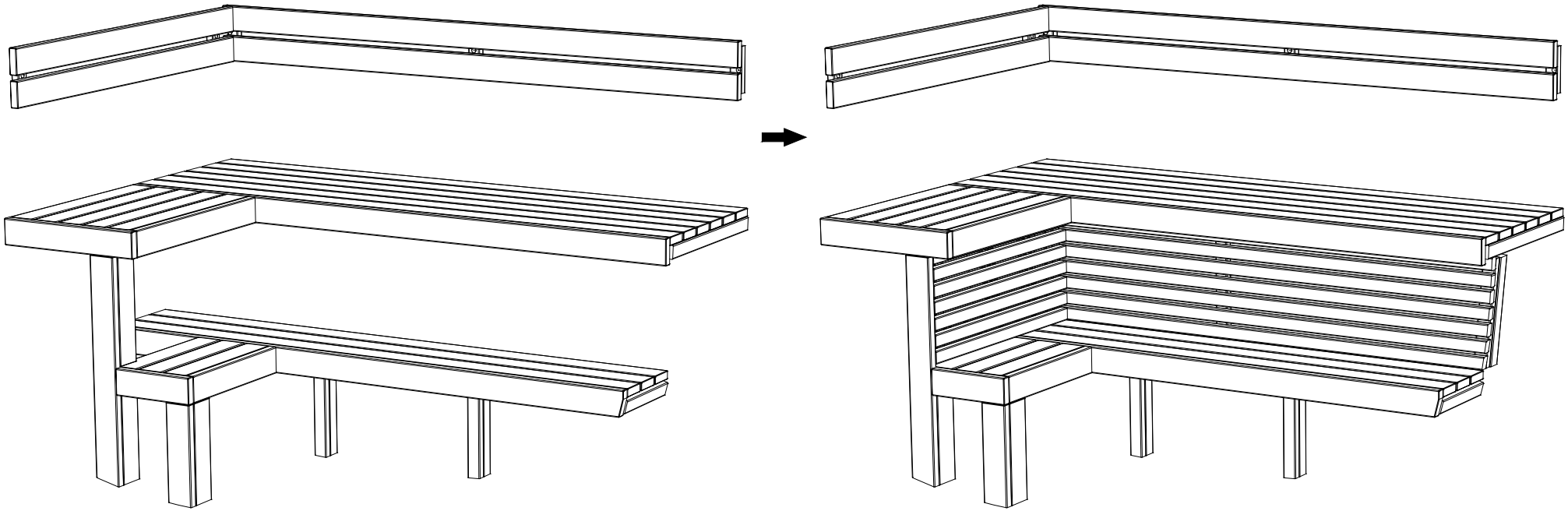

| | | |
|---|---|---|
| S5 | Screws 4,5x60 for Spruce<br>Screws 4,2x55 for Thermo | 4 |
| S7 | Screws 4,5x80 for Spruce<br>Screws 4,2x75 for Thermo | 4 |
|  | | |

NB! use a level

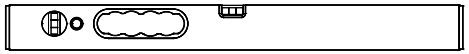

**Notice!**
Drill 4mm hole in the K.. square woods before screwing.

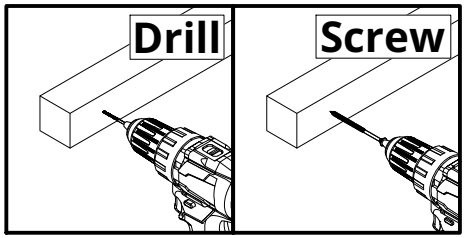


**Please countersink the screw head(s)!**
**Remove D4!**
**Install square woods for benches skirt!**
**Install benches skirt!**

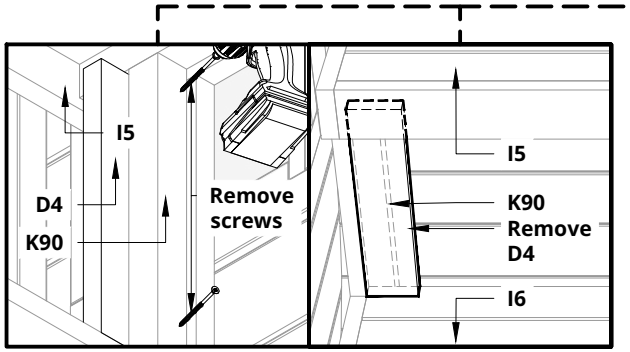


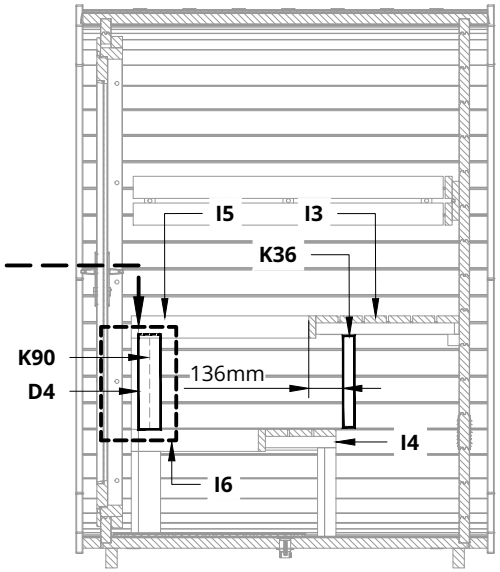


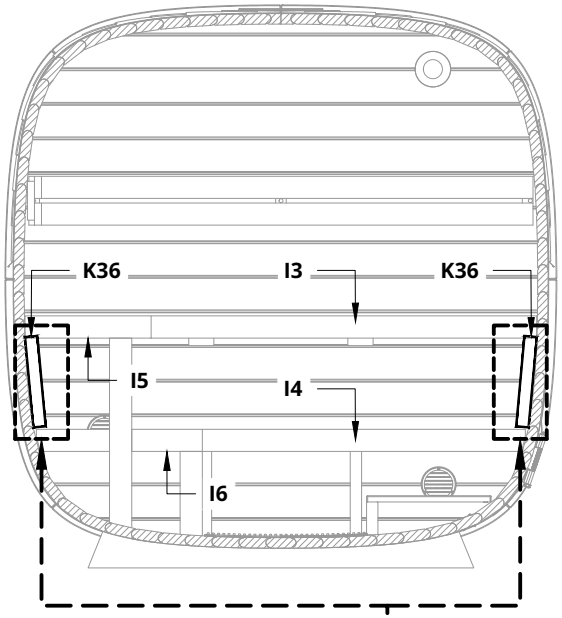


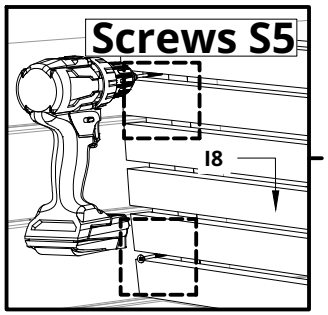


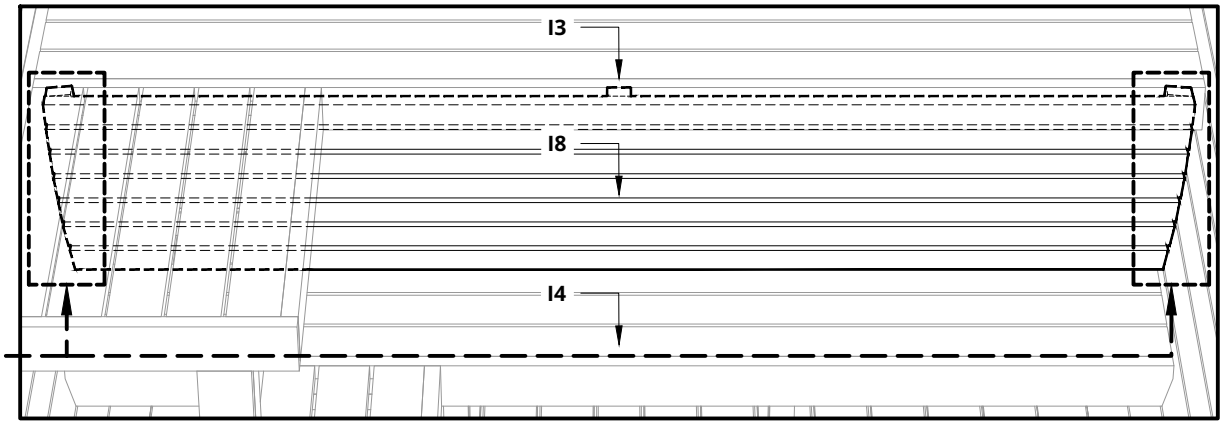


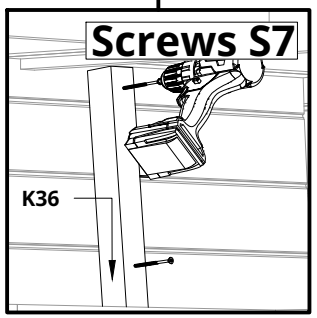

| S5 | Screws 4,5x60 for Spruce<br>Screws 4,2x55 for Thermo | 6 |
|---|---|---|



NB! use a level

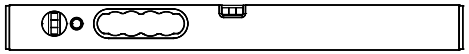

**Notice!**
Drill 4mm hole in the K.. square woods before screwing.

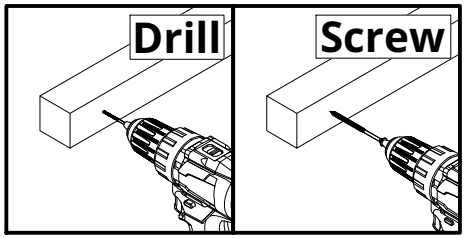


**Please countersink the screw head(s)!**
**First measure and mark the distance for K36!**
**Install benches skirt!**

a = measure+28mm

